GP:50

MELT PRESSURE TRANSDUCERS & TRANSMITTERS

PLASTIC EXTRUSION

PETROCHEMICAL/RESIN

INJECTION MOLDING

MELT PRESSURE TRANSDUCERS AND TRANSMITTERS

GP:50 is an ISO9001 certified designer and manufacturer of a broad range of industrial grade MELT PRESSURE instrumentation for melted process materials, plastics, and polymer extrusion processing applications. All designs have been meticulously optimized for accuracy and survivability over the past 30 years. This careful attention to detail has resulted in a full portfolio of high-reliability melt pressure and temperature sensors. GP:50 Melt Pressure instrumentation is also fully interchangeable with other industry models, including dimensional footprints, mechanical specifications, and electrical connections, with no additional cabling or tooling requirements.

OUR MISSION:

GP:50 Melt Pressure strives to manufacture high-reliability industrial grade pressure MELT PRESSURE and TEMPERATURE sensing instrumentation. As a global supplier, we strive for manufactured products that incorporate proven accuracy, repeatability, and high-quality components. As industry innovators, we apply both engineering ingenuity and continuous customer feedback to all R&D efforts. In doing so, GP:50 Melt Pressure can address evolving market needs via new and optimized sensor designs. We do so while carefully upholding the 100% commitment to quality and value that remains synonymous with the GP:50 brand.

SUPPORTED MELT APPLICATIONS:

- POLYMER EXTRUSION PROCESSING
- EXTRUDER MANUFACTURERS
- PUMPS/VISCOMETERS
- RESIN AND FIBER
- PIPING, TUBING AND PROFILES
- MEDICAL PRODUCTS
- PHARMACEUTICAL
- FOOD/BEVERAGE PACKAGING
- FOOD/HYGIENE
- COMPOUNDING/ADDITIVES
- COATINGS/ADHESIVES
- PLASTICS INJECTION MOLDING

THE GP:50 DIFFERENCE — OUR 100% COMMITMENT TO QUALITY:

- SUPERIOR QUALITY
- PROVEN ACCURACY
- CHOICE OF MECHANICAL AND ELECTRICAL CONNECTIONS
- FULL INTERCHANGEABLITY
- WORLDWIDE SALES & SUPPORT
- EXPEDITED SERVICE
- REPAIR DEPARTMENT

All GP:50 manufacturing processes conform to ISO9001 standards. Sensors are manufactured from raw materials instead of outsourced components. Each unit is fully tested prior to shipment to ensure its absolute conformance to rigorous quality and performance standards. Upon passing final inspection, each sensor is issued a quality test certificate, including a fully traceable unit model and serial number. Ongoing customer feedback is applied toward the continuous quality improvement of all products and processes.

EXPERT CUSTOMER SERVICE AND TECHNICAL SUPPORT

Needing extra help in addressing your melt pressure measurement challenges? We can help. Let the highly experienced GP:50 Melt Pressure customer service team identify the right transducers and transmitters for your application. We offer in-depth advisements on equivalent connections, fills, configurations and options. Our team is particularly adept at application problem-solving where complex process materials, temperature effects, or unique installation conditions may be of concern. Contact us today to ensure that your polymer extrusion processing instrumentation offers maximum performance and trouble-free service life, even in the most demanding of environments.

DESIGN ENGINEERING SERVICES

Needing a solution that falls outside of the standard industry selections? No problem! With 30 years of hands-on experience, the GP:50 Melt Pressure engineering team is well-prepared to support virtually any customer requirement. Working in close collaboration with a customer's own in-house engineering team, the experts at GP:50 can design and develop custom solutions, proprietary configurations, or even support OEM private label and joint venture agreements. GP:50 Melt Pressure is committed to be responsive to the needs of the most challenging opportunities from initial design thru to delivery.

GP:50 reserves the right to make product improvements and amendments to the product specification stated throughout this brochure without prior notification.

DESIGNING FOR SENSOR ACCURACY

A signature performance attribute of GP:50 Melt Pressure sensors is the capability to maintain full service life performance accuracy and repeatability. To ensure this, each transducer design incorporates a specialty tip diaphragm with a proprietary advanced matched system. This ensures that individual sensor components maintain structural integrity and maximum response over time. In addition, each GP:50 Melt Pressure sensor is manufactured from only the highest grade specialty metals. This approach ensures consistent sensor mechanical functionality with increased cycles. It also eliminates the unwanted effects of short-term hysteresis that are common to other industry models.

CHOICE OF FILLS AND INDUSTRY APPROVALS

GP:50 Melt Pressure transducers and transmitters are offered in both mercury and environmentally friendly non-mercury (ASF or NaK) fills. For explosion-proof environments, FM approved non-mercury designs are available. FDA approved versions are also available to support medical, pharmaceutical, and food packaging applications. Additional certifications, including ATEX and CSA, may be available upon request, depending upon specified model. GP:50 Melt Pressure further prides itself on our continued commitment to the environment. Through the **GP:50 GO-GREEN** program, we offer to eco-friendly customers a transducer conversion incentive program to reduce and eliminate the use of hazardous materials in your facility. Please consult GP:50 Melt Pressure Customer Service for details.

NEED IT FAST? ASK ABOUT OUR *EXPEDITE SERVICE OPTION*

The GP:50 Melt Pressure *Expedite Service Option* is expressly designed for customers in critical need of standard units* with very short lead times. By selecting the *Expedite Service Option* , customers are guaranteed a minimum lead time of up to three business days before shipment. This program is further available in both five and ten-day maximum lead times, before shipment, depending upon customer requirements. Please ask a member of our sales team for details.

TABLE OF CONTENTS

V-Series Melt Pressure, Premium 0.25% Accuracy	Pages 4-5
V-Series Melt Pressure, Standard 0.50% Accuracy	Pages 6-7
E-Series Melt Pressure, 1% Accuracy	Pages 8-9
Smart Rangeable Melt Pressure Transmitter/HART	Pages 10-11
Precision Accuracy Melt Temperature Sensor, with Ceramic Insulation	Page 12
Melt Pressure Gauges	Page 13
Rupture Disks and Melt Plugs	Page 14
Accessories	Page 15
Digital Indicators/Controllers	Pages 16-17
Injection Molding — Nozzle Pressure	Pages 18-19
Injection Molding — IMH Model	Pages 20-21
Melt Pressure Kits	Page 22
ASF (Advanced Safe Fill)	Page 23

**Expedite Service Option* is only available for Standard V-Series/S-Series/E-Series 100, 300, 900 models.

Please contact the factory on all critical dimensions and specifications for verification.

V-SERIES

PREMIUM ACCURACY MELT PRESSURE TRANSDUCER / TRANSMITTER

MODELS V130, V131, V135 / V230, V231, V235 / V330, V331, V335

Model V30, Rigid Stem Only

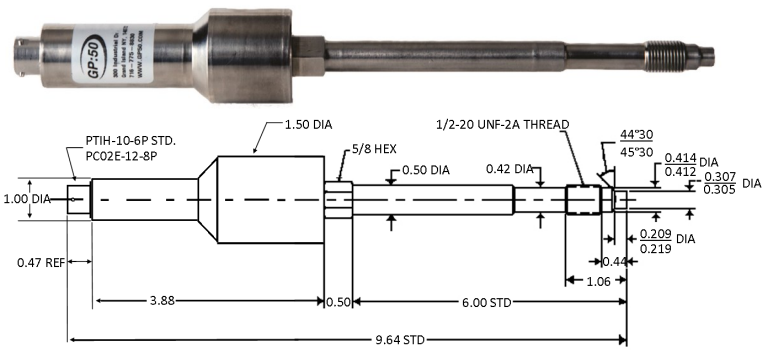

Model V31 Rigid Stem with COIL-FLEX™ Flexible Capillary

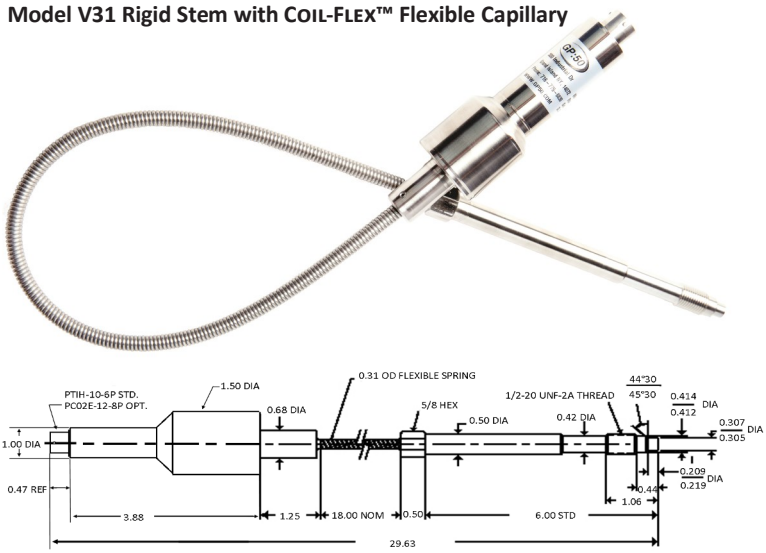

Model V35 Combination Temperature and Pressure

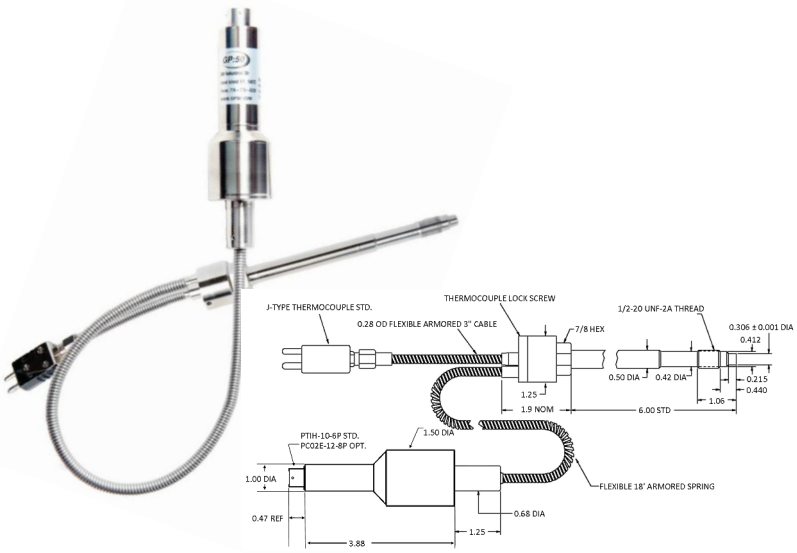

A signature performance attribute of GP:50 Melt Pressure sensing instrumentation is its capability to maintain full service life performance accuracy. To ensure this, each transducer design incorporates a specialty tip diaphragm with a proprietary advanced matched system. This ensures that individual sensor components maintain structural integrity and maximum response. In addition, each GP:50 Melt Pressure sensor is manufactured from only the highest grade specialty metals. This approach ensures consistent sensor mechanical functionality with increased cycles. It also eliminates the unwanted effects of short-term hysteresis that are common to other industry models.

FEATURES

- Completely Welded Stainless Construction
- Interchangeable with existing sensors
- High-quality, superior electronics
- Vibration Protected Housing
- Auto Zero calibration option (200 & 300 units)
- Advanced diaphragm for increased cycles

PRESSURE RANGES

From 0-500 to 0-30,000 PSI

(see ordering guide)

ACCURACY

±0.25% Premium FSO

MADE IN THE U.S.A.

GP:50 reserves the right to make product improvements and amendments to the product specification stated throughout this brochure without prior notification.

SPECIFICATIONS

Full Scale Pressure Ranges	**See ordering guide**		
Accuracy	±0.25% FSO Accuracy,		
Material in Contact with Pressure Media	17-4 PH Stainless Steel diaphragm with GPX coating, optional diaphragm materials available		
Proof Pressure	2 times the full scale pressure range up to 35,000 PSI		
Temperature Limits	**Diaphragm** 750°F (400°C)	**Strain Gauge Housing** 176°F (80°C)	
Temperature Effects	**From Diaphragm** Zero—15 PSI / 100°F	**From Strain Gauge Housing** Zero / Span—Less than ±1.0% FSO / 100°F (±2.0% FSO / 100°C)	
Electricals	**(V100 Models—3.33 mV/V)**	**(V200 Models—0-10 Vdc)**	**(V300 Models—4-20 mA)**
Excitation Voltage	3.5—15 Vdc	14—36 Vdc	14-36 Vdc
Output at 70°F	3.33 mV/V ±2.0% FSO	10.0 Vdc ±2.0% FSO	4-20 mA ±2.0% FSO
Input Impedance	350 ohm, nominal		
Input Current		8 mA, nominal	
Output Current		2.0 mA maximum for less than 0.1% FSO attenuation	
Load Impedance	50,000 ohms minimum for less than 0.1% FSO attenuation		1350 ohms max, at 36 Vdc and 750 ohms 24 Vdc
Zero Balance	0.0 mV/V ±5.0% FSO at 70°F	0.0 Vdc ±5.0% FSO at 70°F	4.0 mA ±5.0% FSO at 70°F
Range Calibration Signal	80% ±5.0% FSO	80% ±5.0% FSO	80% ±5.0% FSO
Connections	**Pressure** 1/2" - 20—UNF—2A	**Electrical** PTIH—10—6P standard, 8-pin and other connectors available	
Enclosed Materials	316 Stainless Steel		
Mounting Torque	180-200 inch pounds, 500 inch pounds thread limitation		

ORDERING GUIDE

MODEL: VX 3X—XX—XX / XX / XX / XX / XX / XX / XX

Other Options Available—Consult Factory / Authorized Distributor

Option "AA" denotes standard

ELECTRICAL OUTPUT	
1	3.33 mV/V
2	0—10 Vdc
3	4—20 mA

BASE MODEL	
0	Rigid Stem Only
1	Rigid Stem / Flex
5	Rigid Stem / Flex with Thermocouple

PRESSURE RANGE			
RH	500 PSI	UV	50 BAR
RJ	600 PSI	UX	75 BAR
RK	750 PSI	UY	100 BAR
RM	1,000 PSI	UZ	150 BAR
RO	1,500 PSI	VA	200 BAR
RS	2,500 PSI	VC	350 BAR
RT	3,000 PSI	VD	500 BAR
RV	5,000 PSI	VE	700 BAR
RX	7,500 PSI	VF	750 BAR
RZ	10,000 PSI	UA	1,000 BAR
SB	15,000 PSI	UH	1,400 BAR
SF	30,000 PSI	UC	2,000 BAR
SZ	_____ PSI Custom	SZ	_____ BAR Custom

FILL TYPES	
AA	Mercury Fill
QJ	NaK Fill (750°F Max)
GW	NaK Fill with Inconel Diaphragm (1000°F)
GX9	ASF non-mercury fill

CONNECTOR OPTIONS	
AA	6-Pin Bendix (PTIH-10-6P)
CC	8-pin Bendix (PCO2E-12-8P)
CF	1/2" NPT (M) Thread with 36" Leads

CALIBRATION	
AA	Zero & Span
AZ	AutoZero, 200 and 300 Models only

TEMPERATURE SENSOR OPTIONS	
AA	J-Type Thermocouple
GU	K-Type Thermocouple
JA	100 ohm RTD (3 wire)
JD	Dual Thermocouple, J-Type std. (Mate not incl.)

CAPILLARY TUBE LENGTH	
AA	18 inch (457.2 mm) Flex
HS	9 inch (228.6 mm) Flex
HY	12 inch (304.8 mm) Flex
HV	24 inch (609.6 mm) Flex
GT	30 inch (762 mm) Flex

RIGID STEM LENGTH	
AA	6 inch (152.4 mm) Rigid Stem
HJ	1 3/16 inch (30.2 mm) Rigid Stem
HD	3 inch (76.2 mm) Rigid Stem
HU	4 inch (101.6 mm) Rigid Stem
GO	9 inch (228.6 mm) Rigid Stem
GN	12.5 inch (317.5 mm) Rigid Stem

DIAPHRAGM OPTIONS	
AA	17—4 SS GPX Coated Diaphragm
GK1	Inconel Diaphragm
GP	Hastelloy C-276 Diaphragm
NK	Reinforced Diaphragm
NL	Double Thick Diaphragm
QS2	Titanium Nitride Coated Diaphragm

Example P/N: V131-RZ-AA

Please contact the factory on all critical dimensions and specifications for verification.

V-SERIES

STANDARD ACCURACY MELT PRESSURE TRANSDUCER / TRANSMITTER

MODELS V162, V163, V164 / V262, V263, V264 / V362, V363, V364

Model V62, Rigid Stem Only

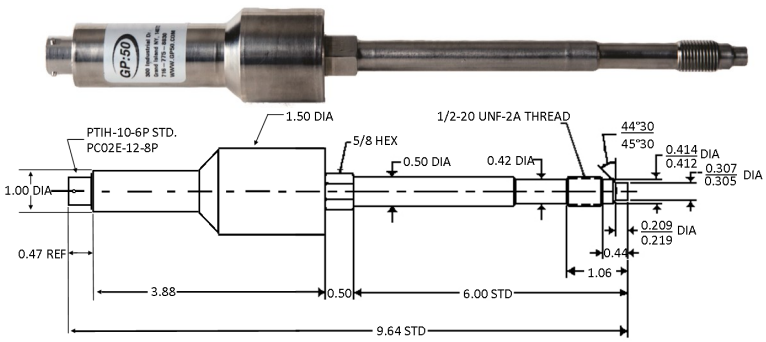

Model V63 Rigid Stem with COIL-FLEX™ Capillary

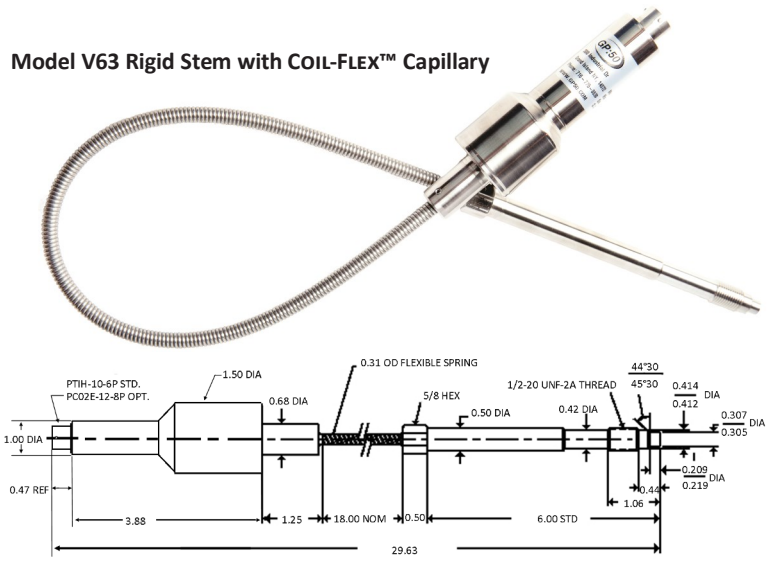

Model V64 Combination Temperature and Pressure

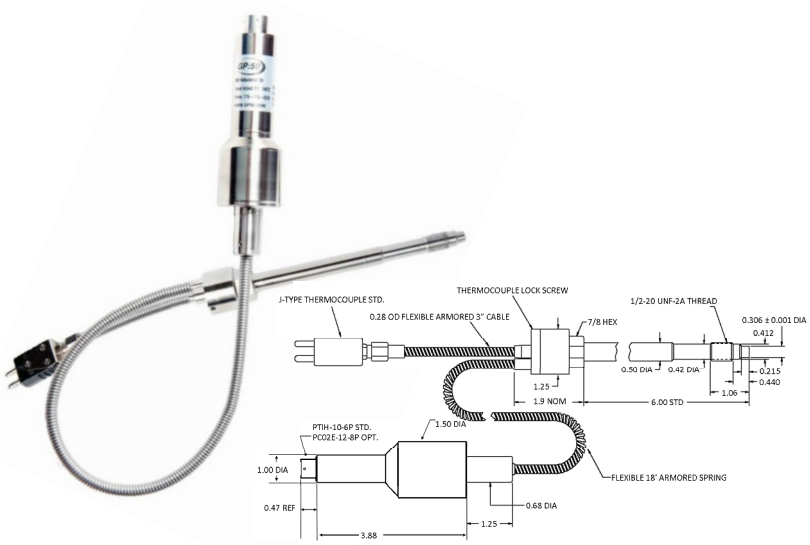

A signature performance attribute of GP:50 Melt Pressure sensing instrumentation is its capability to maintain full service life performance accuracy. To ensure this, each transducer design incorporates a specialty tip diaphragm with a proprietary advanced matched system. This ensures that individual sensor components maintain structural integrity and maximum response. In addition, each GP:50 Melt Pressure sensor is manufactured from only the highest grade specialty metals. This approach ensures consistent sensor mechanical functionality with increased cycles. It also eliminates the unwanted effects of short-term hysteresis that are common to other industry models.

FEATURES

- Completely Welded Stainless Construction
- Interchangeable with existing sensors
- High-quality, superior electronics
- Vibration Protected Housing
- Auto Zero calibration option (200 & 300 units)
- Advanced diaphragm for increased cycles

PRESSURE RANGES

From 0-500 to 0-30,000 PSI
(see ordering guide)

ACCURACY

±0.50% Standard FSO

MADE IN THE U.S.A.

GP:50 reserves the right to make product improvements and amendments to the product specification stated throughout this brochure without prior notification.

SPECIFICATIONS

Full Scale Pressure Ranges	**See ordering guide**		
Accuracy	±0.50% FSO Accuracy,		
Material in Contact with Pressure Media	17-4 PH Stainless Steel diaphragm with GPX coating, optional diaphragm materials available		
Proof Pressure	2 times the full scale pressure range up to 35,000 PSI		
Temperature Limits	**Diaphragm** 750°F (400°C)	**Strain Gauge Housing** 176°F (80°C)	
Temperature Effects	**From Diaphragm** Zero—15 PSI / 100°F	**From Strain Gauge Housing** Zero / Span—Less than ±1.0% FSO / 100°F (±2.0% FSO / 100°C)	
Electricals	**(V100 Models—3.33 mV/V)**	**(V200 Models—0-10 Vdc)**	**(V300 Models—4-20 mA)**
Excitation Voltage	3.5—15 Vdc	14—36 Vdc	14-36 Vdc
Output at 70°F	3.33 mV/V ±2.0% FSO	10.0 Vdc ±2.0% FSO	4-20 mA ±2.0% FSO
Input Impedance	350 ohm, nominal		
Input Current		8 mA, nominal	
Output Current		2.0 mA maximum for less than 0.1% FSO attenuation	
Load Impedance	50,000 ohms minimum for less than 0.1% FSO attenuation		1350 ohms max, at 36 Vdc and 750 ohms 24 Vdc
Zero Balance	0.0 mV/V ±5.0% FSO at 70°F	0.0 Vdc ±5.0% FSO at 70°F	4.0 mA ±5.0% FSO at 70°F
Range Calibration Signal	80% ±5.0% FSO	80% ±5.0% FSO	80% ±5.0% FSO
Connections	**Pressure** 1/2" - 20—UNF—2A, other connections available	**Electrical** PTIH—10—6P standard, 8-pin and other connectors available	
Enclosed Materials	316 Stainless Steel		
Mounting Torque	180-200 inch pounds, 500 inch pounds thread limitation		

ORDERING GUIDE

MODEL: VX 6X—XX—XX / XX / XX / XX / XX / XX / XX

Other Options Available—Consult Factory / Authorized Distributor

Option "AA" denotes standard

ELECTRICAL OUTPUT	
1	3.33 mV/V
2	0—10 Vdc
3	4—20 mA

BASE MODEL	
2	Rigid Stem Only
3	Rigid Stem / Flex
4	Rigid Stem / Flex with Thermocouple

PRESSURE RANGE			
RH	500 PSI	UV	50 BAR
RJ	600 PSI	UX	75 BAR
RK	750 PSI	UY	100 BAR
RM	1,000 PSI	UZ	150 BAR
RO	1,500 PSI	VA	200 BAR
RS	2,500 PSI	VC	350 BAR
RT	3,000 PSI	VD	500 BAR
RV	5,000 PSI	VE	700 BAR
RX	7,500 PSI	VF	750 BAR
RZ	10,000 PSI	UA	1,000 BAR
SB	15,000 PSI	UH	1,400 BAR
SF	30,000 PSI	UC	2,000 BAR
SZ	_____ PSI Custom	SZ	_____ BAR Custom

FILL TYPES	
AA	Mercury Fill (750°F Max)
QJ	NaK Fill (750°F Max)
GW	NaK Fill with Inconel Diaphragm (1000°F Max)
GX	Mineral Oil Fill (500°F Max)
GX9	ASF Non-Mercury Fill (750°F Max)

CONNECTOR OPTIONS	
AA	6-Pin Bendix (PTIH-10-6P)
CC	8-pin Bendix (PCO2E-12-8P)
CF	1/2" NPT (M) Thread with 36" Leads

CALIBRATION	
AA	Zero & Span
AZ	Auto Zero, 200 and 300 models only

TEMPERATURE SENSOR OPTIONS	
AA	J-Type Thermocouple
GU	K-Type Thermocouple
JA	100 ohm RTD (3 wire)
JD	Dual Thermocouple, J-Type std. (Mate not incl.)

CAPILLARY TUBE LENGTH	
AA	18 inch (457.2 mm) Flex
HS	9 inch (228.6 mm) Flex
HY	12 inch (304.8 mm) Flex
HV	24 inch (609.6 mm) Flex
GT	30 inch (762 mm) Flex

RIGID STEM LENGTH	
AA	6 inch (152.4 mm) Rigid Stem
HJ	1 3/16 inch (30.2 mm) Rigid Stem
HD	3 inch (76.2 mm) Rigid Stem
HU	4 inch (101.6 mm) Rigid Stem
GO	9 inch (228.6 mm) Rigid Stem
GN	12.5 inch (317.5 mm) Rigid Stem

DIAPHRAGM OPTIONS	
AA	17—4 SS GPX Coated Diaphragm
GK1	Inconel Diaphragm
GP	Hastelloy C-276 Diaphragm
NK	Reinforced Diaphragm
NL	Double Thick Diaphragm
QS2	Titanium Nitride Coated Diaphragm

Example P/N: V163-RZ-AA

Please contact the factory on all critical dimensions and specifications for verification.

E-SERIES

1% ACCURACY MELT PRESSURE TRANSDUCER / TRANSMITTER

MODELS 190, 191, 195, 290, 291, 295, 390, 391, 395

The E-Series melt pressure transducers are designed for general melt pressure measurement, offering typical installation and reliability. It is the value choice acceptable by OEMs and users around the globe. The GP:50 E-Series transducers incorporate industry standard 3.33 mV/V electrical output compatible with melt pressure indicators. Integrated thermocouple is available for melt temperature. The GP:50 E-series include a ½ - 20 UNF thread for installation in standard mounting holes and offer a range of electrical connections for most applications.

Model 90 Rigid Stem Only

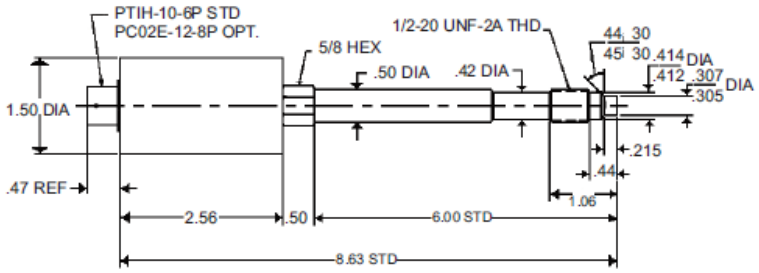

Model 91 Rigid Stem with Flexible Capillary

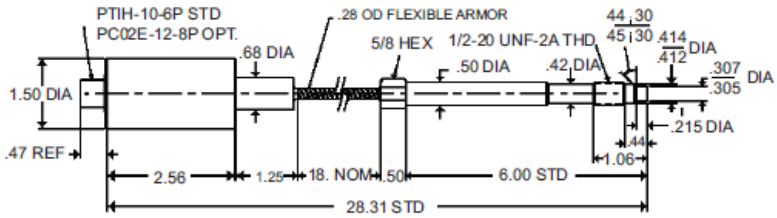

Model 95 Combination Temperature and Pressure

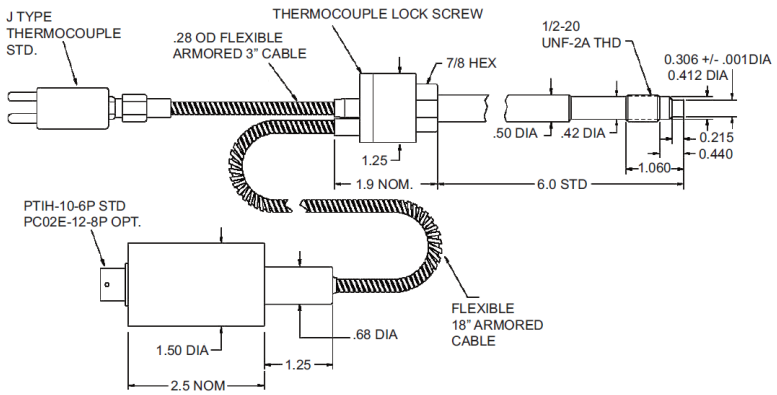

FEATURES

- Meets the Needs for General Measurement
- Abrasion Resistant GPX Coating
- Standard Electrical Output
- Completely Welded Stainless Construction
- Economical
- 2 Year Warranty

PRESSURE RANGES

From 0-3,000 to 0-10,000 PSI
(see ordering guide)

ACCURACY

±1.0% Standard FSO

100% MADE IN THE U.S.A.

GP:50 reserves the right to make product improvements and amendments to the product specification stated throughout this brochure without prior notification.

SPECIFICATIONS

Full Scale Pressure Ranges	**See ordering guide**		
Accuracy	±1.0% FSO Accuracy,		
Material in Contact with Pressure Media	15-5 PH Stainless Steel diaphragm with GPX coating		
Proof Pressure	2 times the full scale pressure range up to 20,000 PSI		
Temperature Limits	**Diaphragm** 750°F (400°C)	**Strain Gauge Housing** 176°F (80°C)	
Temperature Effects	**From Diaphragm** Zero—15 PSI / 100°F	**From Strain Gauge Housing** Zero / Span—Less than ±1.0% FSO / 100°F (±2.0% FSO / 100°C)	
Electricals	**(100 Models—3.33 mV/V)**	**(200 Models—0-10 Vdc)**	**(300 Models—4-20 mA)**
Excitation Voltage	3.5—15 Vdc	14.5—34 Vdc	14-36 Vdc
Output at 70°F	3.33 mV/V ±2.0% FSO	10.0 Vdc ±2.0% FSO	4-20 mA ±2.0% FSO
Input Impedance	350 ohm, nominal		
Input Current		8 mA, nominal	
Output Current		2.0 mA maximum for less than 0.1% FSO attenuation	
Load Impedance	50,000 ohms minimum for less than 0.1% FSO attenuation,		1350 ohms maximum, at 36 Vdc and 750 ohms 24 Vdc
Zero Balance	0.0 mV/V ±5.0% FSO at 70°F	0.0 Vdc ±5.0% FSO at 70°F	4.0 mA ±5.0% FSO at 70°F
Range Calibration Signal	80% ±5.0% FSO	80% ±5.0% FSO	
Connections	**Pressure** 1/2" - 20—UNF—2A	**Electrical** PTIH—10—6P standard, 8-pin connector available	
Enclosed Materials	316 Stainless Steel		
Mounting Torque	180-200 inch pounds, 500 inch pounds thread limitation		

ORDERING GUIDE

Example P/N: 191-RV-CC

MODEL: X 9X—XX—XX / XX / XX / XX / XX / XX

ELECTRICAL OUTPUT	
1	3.33 mV/V
2	0—10 Vdc
3	4—20 mA

BASE MODEL	
0	Rigid Stem Only
1	Rigid Stem / Flex
5	Rigid Stem / Flex with Thermo-couple

PRESSURE RANGE	
RT	3,000 PSI
RV	5,000 PSI
RX	7,500 PSI
RZ	10,000 PSI

CONNECTOR OPTIONS	
AA	6-Pin Bendix (PTIH-10-6P)
CC	8-pin Bendix (PCO2E-12-8P)

FILL TYPES	
AA	Mercury Fill

DIAPHRAGM OPTIONS	
AA	17—4 SS GPX Coated Diaphragm

RIGID STEM LENGTH	
AA	6 inch (152.4 mm) Rigid Stem

CAPILLARY TUBE LENGTH	
AA	18 inch (457.2 mm) Flex

TEMPERATURE SENSOR OPTIONS	
AA	J-Type Thermocouple

Option "AA" denotes standard

Please contact the factory on all critical dimensions and specifications for verification.

SMART RANGEABLE MELT PRESSURE TRANSMITTER

MODELS 430, 431 / 430X, 431X, / 430P, 431P

A signature performance attribute of GP:50 Melt Pressure sensing instrumentation is its capability to maintain full service life performance accuracy. To ensure this, each transducer design incorporates a specialty tip diaphragm with a proprietary advanced matched system. This ensures that individual sensor components maintain structural integrity and maximum response. In addition, each GP:50 Melt Pressure sensor is manufactured from only the highest grade specialty metals. This approach ensures consistent sensor mechanical functionality with increased cycles. It also eliminates the unwanted effects of short-term hysteresis that are common to other industry models.

FEATURES

- Completely Welded Stainless Steel Construction
- HART® Communication
- FM Explosion Proof available (Class I, II, II, Div. I, Groups A –G)

PRESSURE RANGES

From 0-500 to 0-30,000 PSI

ACCURACY

±0.15% FSO

Consult Factory for hazardous location approval availability.

MADE IN THE U.S.A.

GP:50 reserves the right to make product improvements and amendments to the product specification stated throughout this brochure without prior notification.

SPECIFICATIONS

Accuracy	**Static Error Band (Non-linearity, Hysteresis, Non-Repeatability, includes temperature effects)** **±0.25% FSO (RSS) 500 through 3,000 psi** **±0.15% FSO (RSS) 5,000 through 30,000 psi**	
Ranging	3:1 (500 through 2,500 psi) 5:1 (3,000 through 30,000 psi)	
Operating Temperature Range (Compensated)		
Process	**77°F to 575°F (25°C to 300°C), optional to 660°F (350°C)**	
Electronics	**77°F to 176°F (25° C to 80° C)**	
Temperature Effects from Electronics	Less than ±0.15% FSO / 100°F	
Electricals	**Excitation Voltage**	**Output at 70°F**
(Model 430, 431, 430X, 431X)	12-36 Vdc	4-20 mA ± 0.1% FSO
Load Impedance	250 ohms minimum (for HART® Communication) @ 17 Vdc; 1200 ohms at 36 Vdc	
Output Current	4-20 mA ±0.1% FSO at 70°F	
Connections	**Pressure**	**Electrical**
	1/2" - 20—UNF—2A	430, 431: PTIH—10—6P standard (Mate not included) 430X, 431X: 1/2" NPT (M) Thread with 72" Leads
Enclosed Materials	316 Stainless Steel	
Mounting Torque	180-200 inch pounds, 500 inch pounds thread limitation	
Identification	Laser etched	

ORDERING GUIDE

MODEL: 43X—XX / XX / XX / XX / XX / XX / XX

Example P/N: 430X-RX-QO/AA

BASE MODEL	
0	Rigid Stem Only
1	Rigid Stem / Flex

HAZARDOUS APPROVALS	
AA	No Approvals
X	FM Explosion Proof
P	FM and CSA Explosion Proof

PRESSURE RANGE			
RH	500 PSI	UV	50 BAR
RJ	600 PSI	UX	75 BAR
RK	750 PSI	UY	100 BAR
RM	1,000 PSI	UZ	150 BAR
RO	1,500 PSI	VA	200 BAR
RR	2,000 PSI	VB	300 BAR
RS	2,500 PSI	VC	350 BAR
RT	3,000 PSI	VD	500 BAR
RV	5,000 PSI	VE	700 BAR
RX	7,500 PSI	VF	750 BAR
RZ	10,000 PSI	UA	1,000 BAR
SB	15,000 PSI	UH	1,400 BAR
SD	20,000 PSI	UB	1,500 BAR
SF	30,000 PSI	UC	2,000 BAR
SZ	_____ PSI Custom	SZ	_____ BAR Custom

CONNECTOR OPTIONS	
AA	6-Pin Bendix (PTIH-10-6P), Standard for 431 Model
AA	1/2" NPT (M) Thread with 72" Leads, Standard for 431X and 431P Models
CC	8-pin Bendix (PCO2E-12-8P)
CF	1/2" NPT (M) Thread with 36" Leads

CAPILLARY TUBE LENGTH	
AA	18 inch (457.2 mm) Flex
HS	9 inch (228.6 mm) Flex
HY	12 inch (304.8 mm) Flex
GT	30 inch (762 mm) Flex

RIGID STEM LENGTH	
AA	6 inch (152.4 mm) Rigid Stem
HJ	1 3/16 inch (30.2 mm) Rigid Stem
HD	3 inch (76.2 mm) Rigid Stem
GO	9 inch (228.6 mm) Rigid Stem
GN	12.5 inch (317.5 mm) Rigid Stem

DIAPHRAGM OPTIONS	
AA	17-4 Stainless GPX Coated Diaphragm
GK1	Inconel Diaphragm
GP	Hastelloy C-276 Diaphragm
NK	Reinforced Diaphragm
QS2	Titanium Nitride Coated Diaphragm

FILL TYPES	
AA	Mercury Fill (750°F Max)
QJ	NaK Fill (750°F Max)
GW	NaK Fill with Inconel Diaphragm (1000°F Max)
GX	Mineral Oil Fill (500°F Max)
GX9	ASF Non-Mercury Fill (750°F Max)

Other Options Available—Consult Factory / Authorized Distributor

Option "AA" denotes standard

Please contact the factory on all critical dimensions and specifications for verification.

PRECISION ACCURACY MELT TEMPERATURE SENSOR

MODEL T1

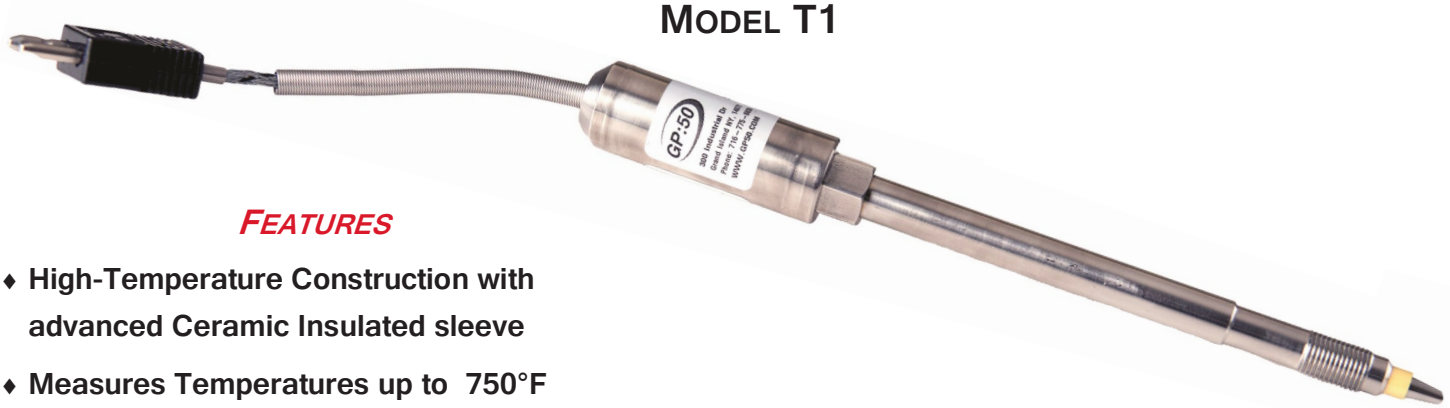

FEATURES

- High-Temperature Construction with advanced Ceramic Insulated sleeve
- Measures Temperatures up to 750°F

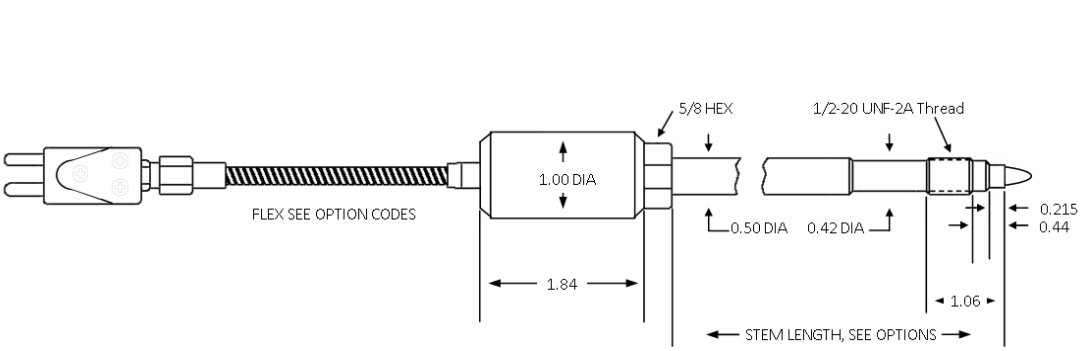

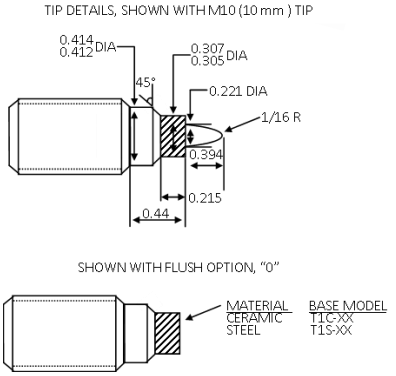

ORDERING GUIDE

MODEL: T1X—XX—XX—XX / XX / XX / XX XX

BASE MODEL	
C	Ceramic-Isolated Tip
S	Steel Construction

IMMERSION DEPTH / TIP TYPE	
0	Flush
M5	5 mm

SENSOR TYPE	
J	J-Type Thermocouple, Single
J2	J-Type Thermocouple, Dual
K	K-Type Thermocouple, Single
K2	K-Type Thermocouple, Dual
E	E-Type Thermocouple, Single
E2	E-Type Thermocouple, Dual
R2	RTD PT100 2-Wire System
R3	RTD PT100 3-Wire System
R4	RTD PT100 4-Wire System

CONNECTIOR	
P	Plug type, Round Pins
M	Mini Plug Type, Flat Pins
E2	2-Socket Lemo Era Connector
E4	4-Socket Lemo Era Connector
CA	4-Pin PTIH-8-4P Connector
CM	6-Pin PTIH-10-6P Connector

Example P/N: **T1C-0-J-P/6/A/3**

SENSOR TIP MATERIAL	
AA	Standard Stainless Steel
H	Hastelloy C-276
I	Inconel 718

ARMORED CABLE LENGTH	
3	3"
10	10"
18	18"
30	30"

THREAD TYPE	
A	1/2" - 20 UNF— 2A Thread
C	M18—1.5 Metric Thread

STEM LENGTH	
3	3" Stem
6	6" Stem
9	9" Stem
12.5	12.5" Stem

GP:50 reserves the right to make product improvements and amendments to the product specification stated throughout this brochure without prior notification.

EXTRUSION MELT PRESSURE GAUGES

MODEL A30, A31

FEATURES

- No Electrical Power required
- All Stainless Steel Construction
- Large 4" Display can be rotated 300° for easy reading
- Totally Maintenance free
- Full Two-Year Manufacturer's Warranty

SPECIFICATIONS

Pressure Ranges	0-5,000 PSI or 0-10,000 PSI, dual scale PSI and BAR
Mounting	1/2-20 UNF thread, standard (M18 x 1.5 available)
Mounting Torque	180-200 inch pounds, 500 inch pounds maximum
Diaphragm	15-5 PH Stainless Steel
Overload Capacity	1.5 times full scale
Temperature Rating	Diaphragm 750°F
Accuracy	1.5% Full Scale
Zero Adjust	10% Full Scale
Needle Sweep	270°
Dial	Large 4" dial with safety glass
Stem Length	6", standard
Capillary Tube Length	30", standard (Model A31)

ORDERING GUIDE

MODEL: A3X—X—XX / XX

Example P/N: A30-RZ-AA

BASE MODEL	
0	Rigid Stem Only
1	Rigid Stem w/18" Flex Capillary

PRESSURE RANGE	
RV	0-5,000 PSI, 0-350 BAR (Dual Scale)
RZ	0-10,000 PSI, 0-700 BAR (Dual Scale)

RIGID STEM LENGTH	
AA	6" Rigid Stem (1542.4 MM)
GN	12.5" Rigid Stem (317.5 mm)

OPTIONS	
AA	None
HQ	J-Type Thermocouple, A31 only
CF	K-Type Thermocouple, A31 only
FB	M18 X 1.5 Thread
SU	Stem-Up Configuration

Other Options Available—Consult Factory/ Authorized Distributor

Please contact the factory on all critical dimensions and specifications for verification.

RUPTURE DISKS (BURST PLUGS) / MELT PLUGS (SOLID PLUGS)

MODEL RDEB AND MP30

Unit is mounted directly into the extruder equipment through a pressure port or mechanical connection, where critical pressures occur. Utilizing reliable rupture discs (also known as burst plugs/ extruder barrels) provides protection for extrusion machinery and ensures operator safety.

FEATURES

- **Assembly consists of a threaded tubular body with a rupture disk soldered onto the process end**
- **One piece construction**
- **300 series SS body material, other materials available**
- **Burst Rating 750 to 15, 000 PSIG**
- **Burst Tolerance: ±10%**
- **Certified**

ORDERING GUIDE

MODEL: XXXX—XXX—XX / XX / XX

MODEL	
RDEB	Rupture Disk (Over-Pressure Protection)
MP30	Solid Plug (No Pressure Relief)

LENGTH AND CONFIGURATION	
1SL	1" Rupture Disk with Slotted Head
2SL	2" Rupture Disk with Slotted Head
3H	3" Rupture Disk with Hex Head*
4H	4" Rupture Disk with Hex Head*
6H	6" Rupture Disk with Hex Head*
7H	7" Rupture Disk with Hex Head*
9H	9" Rupture Disk with Hex Head*
12H	12" Rupture Disk with Hex Head*

*** Length Defined as the Length under the Hex head**

Example P/N:

RDEB-9H-5M

OPTIONS	
AA	None
1/4 NPT	1/4" NPT Discharge Connections
1/2 NPT	1/2" NPT Discharge Connections

THREAD TYPE	
AA	1/2-20 UNF 2A
5/8	5/8X11 NC (RD4H, RD6H, RD9H only)
3/4	3/4x16 UNF 2A Full Thread
3/4S	3/4x16 UNF 2A Short Thread

PRESSURE RANGE			
1.5M	1,500 PSI	7.5M	7,500 PSI
2.5M	2,500 PSI	8.5M	8,500 PSI
3.5M	3,500 PSI	9M	9,000 PSI
4.5M	4,500 PSI	9.5M	9,500 PSI
5M	5,000 PSI	10M	10,000 PSI
5.5M	5,500 PSI	12.5M	12,500 PSI
6.5M	6,500 PSI	15M	15,000 PSI

GP:50 reserves the right to make product improvements and amendments to the product specification stated throughout this brochure without prior notification.

MELT PRESSURE ACCESSORIES

Maintenance Accessories for the prolonged life of GP:50 Transducers and Transmitters.

For more information or product availability, please contact your factory authorized Distributor/Rep.

HOLE MACHINING TOOL KIT

The Hole Machining Tool Kit contains all of the necessary drills and taps to prepare a standard 1/2 - 20 UNF transducer mounting hole. The kit contains the special pilot drill required to machine the 45 degree seat. All tools included in this kit are made of premium grade, high strength tool steel. Care should be taken in the use of proper speeds and feeds, lubricants, and a method to assure continual alignment of each progressing tool.

HOLE CLEANING TOOL KIT

The Cleaning Tool Kit removes unwanted plastic residue from mounting holes before transducer installation. A major cause of damage during installation practices is a transducer installed in a plugged or dirty mounting hole. The Cleaning Tool Kit will give a thorough cleaning of the mounting hole, while also checking the stability of the hole itself. Cleaning tools are available for 1/2-20 mounting holes and M18 X 1.5 mounting holes.

TRANSDUCER SIMULATOR / TESTER

The TST-MV/V simulates the output of any melt pressure transducer, (3.33 mV/V output), adjustment settings for various pressure levels when testing output for existing melt pressure transducers. The simulator is available with standard 6-pin connector or 8-pin (with adaptor cable).

MELT SENSOR TORQUE WRENCH

Precision Melt Pressure Torque Wrench for the recommended torque of melt pressure transducers and temperature sensors. This unit is designed to improve transducer accuracy and life expectancy by avoiding unaccountable additional torque to the threads and seat of ½-20 UNF transducers, while eliminating the possibility of side force trauma to the transducer tip diaphragm area.

ADDITIONAL ACCESSORIES

GP:50 also offers transducer mounting brackets, replacement thermocouples, adaptor cables and a variety of installation items to make your installation complete.

Please contact the factory on all critical dimensions and specifications for verification.

GPR700/770 1/4 DIN

MELT PRESSURE INDICATOR/CONTROLLER

FEATURES

- Universal + strain gauge inputs
- Three fast-acting alarms to protect against overpressure
- High visibility three color LED display
- High reliability and quality
- Three year warranty
- Optional secondary input for differential pressure/temperature display or control
- Analog retransmission
- Easy, effective auto-tune
- Direct replacement for UPR700/770 models

TECHNICAL DATA

Power Requirements	Main Power Supply Pwr. Sup. Var. Pwr. Consumption Optional Power Sup. Pwr. Sup. Var. Pwr. Consumption	100 to 230V ac 50/60 Hz 100 to 230V ac 50/60 Hz ± 15% Max 22VA at 50Hz; Max 27VA at 60Hz 24V ac/dc From 14 to 30V ac From 14 to 32V dc Max 18VA at 24V ac 50/60 Hz; Max 12W at 24Vdc
	Electromagnetic Compatibility	Compliant with the European Directive 2004/108/CE according to Product Standard EN 61326-1
	Approvals	CE, cUL, RoHS 2
Environmental Performance	Temperature Limits	**Operation:** 0 to 50°C (32 to 122°F) **Storage:** -20 to 70°C (-4 to 158°F)
	Altitude	<6500 ft.
	Humidity Limits	0 to 95% RH non-condensing
	Panel Sealing	IP55
Physical	Panel mounting	1/4 DIN
	Dimensions:	96W x 96H x 128Dmm (Panel cut-out 92Wx92H)
	Weight	1.43 lb (650 g.)
Operator Interface	Type	LED (visible from 20ft.)
	Main PV Display	5 digits, green, 13.3mm high
	Secondary Display	5 digits, amber, 10.7mm high
	Bar Graph	35 segments, green with 3% resolution
	Status Beacons	4 engineering units, 3 alarms, 18 active status beacons, including engineering units and alarms

Communications	Protocol:	Modbus RTU slave
	Transmission Standard	EIA485
Process Variable Input (Main Input)	Strain Gauge Input:	From 340 to 5000Ω bridge
	Sensitivity:	1-4 mV/V
	Connection:	4 or 5 wire (5 uses internal shunt)
	Excitation:	10 V± 7%
	Calibration Accuracy	± 0.1% FSO ± digit@25°C± 1°C
	Input span:	-25/125% of full scale (approx. 10/50mV)
	Linear Input:	0-5 Vdc, 0-10 V, 0-20 mA, 4-20 mA
	Sample rate:	50 ms (typical)
	Resolution:	4000 counts/12 bits
	Zero balance:	± 25% of full scale (approximately ± 10 mV
	Drift with temperature	<300 ppm/K of full span for current, voltage and strain gauge input
	Common mode rejection:	>120dB @ 50/60Hz
	Series mode rejection:	>60dB @ 50/60Hz

GP:50 reserves the right to make product improvements and amendments to the product specification stated throughout this brochure without prior notification.

TECHNICAL DATA

The GPR700 is a fully programmable indicator with a single input configured for melt pressure measurement and the choice of wiring either strain gauge or amplified transducers to the unit. An optional second input provides an additional facility for differential pressure measurement if required.

The update time for each channel is 50ms to respond to very fast processes. To provide full process measurement, the second input can be configured for either thermocouple or RTD temperature measurement.

Three pre-configured and ready to use alarms are associated to the process to detect high and low pressure conditions. A flexible alarm strategy enables shutdown of the extruder at dangerous pressure levels.

Secondary Process Variable Input	Strain gauge input:	For differential pressure calculation
	Input features:	See main input features above
	Linear input: GPR770 only	For differential pressure or remote set point see main input (above)
	Input features:	See main input (above)
	Thermocouple: GPR 700 only	J,K,L,N,T,E
	RTD Resistance: GPR 700 only	3-wire Pt 100, Pt 500
	Input impedance:	>1MΩ for thermocouple input <10Ω for linear current input >165kΩ for linear voltage input
	Sample rate temp. input:	100, 200, 500 or 1000ms
Software Features	**Control** Number of loops: Control loop update: Control types: Modes: Autotune:	 1 50ms (typical) PI/PID Auto, manual, forced manual Tune algorithm from manual mode. Adaptive algorithm in auto mode
	Transducer calibration Calibration types: Shunt resistor:	 With or without shunt resistor Programmable from 40 to 100%, default 80%
	Alarms Number: Type:	 3 Absolute high & low, deviation high, Low or band Low masked on start up Auto / Manual reset
	Other Features: Peak monitor: Automatic stand-by:	Stores high or low values Avoids overshoot caused by temporary process interruptions

Main Analogue Output	Function: GPR700 GPR770	PV retransmission Control Output
	Rating:	Configurable between: 0/10 VDC, min. load 5kΩ -10/+10 VDC, min. load 5kΩ 0/5 VDC min. load 5kΩ 0/20 mA, max. load 500Ω 4/20 mA, max. load 500Ω
	Accuracy:	0.1% in manual mode, 0.03% in automatic mode
	Resolution:	0.1% of output span
	Isolation:	From input / output
	Output filter:	Selectable: OFF, 0.4,1, 2, 3, 4, 5s
Secondary Analogue Output	Function: GPR700 GPR770	Configured as pressure or temp. input retransmission Acts as pressure input retransmission
	Output features:	See main analogue output (above)
Relay Output	**Alarm 1-2** Type: Rating: Functions:	 Form C (changeover) 2A max @ 240V ac resistive load Process alarm
	Alarm 3 Type: Rating: Functions:	 Form A (normally open) 2A max @ 240V ac resistive load Process alarm
Digital Input	**Reset/Cal (GPR 700/770** Isolation: Functions:	None from PV Configurable as: Alarm reset Peak reset Alarm and peak reset Zero calibration of the primary input: Zero calibration of the primary input, alarm and Peak reset
	1-2-3-4 (GPR770) Isolation: Functions:	Opto-isolated from input/output Dig In 1: Automatic/manual control Dig In 2: Control output value increase Dig In 3: Control output value decrease Dig In 4: Automatic to manual mode setting to zero the control output

ORDERING GUIDE

MODEL: GPR7X0—X—X—X / X

BASE MODEL	
7	Controller
0	Indicator

POWER SUPPLY	
0	120/240VAC Power
1	24DC Power

SECONDARY INPUT	
0	None
1	GRR700/ Second Input (PV 2)
2	GPR770/ Second Input (remote SP and PV 2)

OTHER	
SSU	System Set-Up

COMMUNICATIONS	
0	No Communications
1	RS-485 ModBus/24VDC Xmitter PSU/Retransmission
2	24VDC Xmitter PSU / Retransmission

Please contact the factory on all critical dimensions and specifications for verification.

NOZZLE PRESSURE TRANSDUCER

MODEL V163-IB, V263-IB, V363-IB

APPLICATIONS

- INJECTION MOLDING

FEATURES

- FULLY WELDED STAINLESS STEEL CONSTRUCTION
- INTERCHANGEABLE WITH EXISTING SYSTEMS
- HIGH-QUALITY, RELIABLE ELECTRONICS
- VIBRATION PROTECTION
- AVAILABLE OPTIONS FOR ALL MELT APPLICATIONS
- IMPROVED DIAPHRAGM FOR INCREASED CYCLES AND REPEATABLE ACCURACY

PRESSURE RANGES

- FROM 0-500 THROUGH 0-30,000 PSIG

ACCURACY

- ±0.50% FSO, 5,000-30,000 PSI

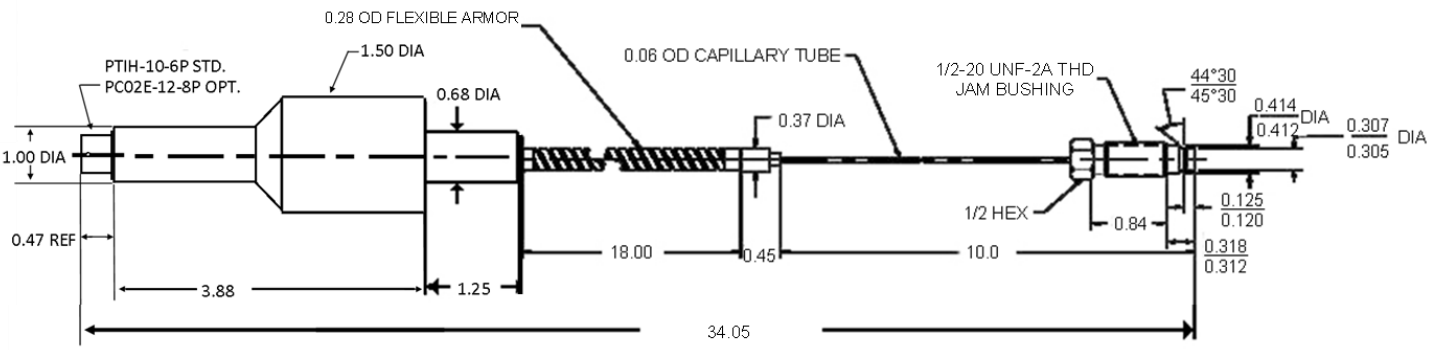

GP:50 reserves the right to make product improvements and amendments to the product specification stated throughout this brochure without prior notification.

SPECIFICATIONS

FULL SCALE PRESSURE RANGES	**SEE ORDERING GUIDE**		
ACCURACY	(NON-LINEARITY, HYSTERESIS, NON-REPEATABILITY)		
STATIC ERROR BAND	±0.50% FSO, 5,000-30,000 PSI		
MATERIAL IN CONTACT WITH PRESSURE MEDIA	17-4 PH STAINLESS STEEL DIAPHRAGM WITH GPX COATING, OPTIONAL DIAPHRAGM MATERIALS AVAILABLE		
PROOF PRESSURE	2 TIMES THE FULL SCALE PRESSURE RANGE UP TO 35,000 PSI		
TEMPERATURE LIMITS	**DIAPHRAGM** 750°F (400°C)	**STRAIN GAUGE HOUSING** 176°F (80°C)	
TEMPERATURE EFFECTS	**FROM DIAPHRAGM** ZERO—15 PSI / 100°F	**FROM STRAIN GAUGE HOUSING** ZERO / SPAN—LESS THAN ±1.0% FSO / 100°F (±2.0% FSO / 100°C)	
ELECTRICALS	**(V163-IB, 3.33 MV/V)**	**(MODEL V263-IB, 0-10 VDC)**	**(MODEL V363-IB, 4-20 MA)**
EXCITATION VOLTAGE	3.5—15 VDC	14—36 VDC	14-36 VDC
OUTPUT AT 70°F	3.33 MV/V ±2.0% FSO	10.0 VDC ±2.0% FSO	4-20 MA ±2.0% FSO
IMPUT IMPEDANCE	350 OHM, NOMINAL		
IMPUT CURRENT		8 MA, NOMINAL	
OUTPUT CURRENT		2.0 MA MAXIMUM FOR ≤ 0.1% FSO ATTENUATION	
LOAD IMPEDANCE	50,000 OHMS MINIMUM FOR ≤ 0.1% FSO ATTENUATION		1350 OHMS MAXIMUM, AT 36 VDC AND 750 OHMS 24 VDC
ZERO BALANCE	0.0 MV/V ±5.0% FSO AT 70°F	0.0 VDC ±5.0% FSO AT 70°F	4.0 MA ±5.0% FSO AT 70°F
RANGE CALIBRATION SIGNAL	80% ±5.0% FSO	80% ±5.0% FSO	
CONNECTIONS	**PRESSURE** 1/2" - 20—UNF—2A	**ELECTRICAL** PTIH—10—6P STANDARD, 8-PIN AND OTHER CONNECTORS AVAILABLE	
ENCLOSED MATERIALS	316 STAINLESS STEEL		
MOUNTING TORQUE	180-200 INCH POUNDS, 500 INCH POUNDS THREAD LIMITATION		

ORDERING GUIDE

Example P/N: V163-IB-RZ-AA

Model: VX 63—IB—XX—XX / XX / XX / XX

ELECTRICAL OUTPUT	
1	3.33 mV/V
2	0—10 Vdc
3	4—20 mA

BASE MODEL	
63	Rigid Stem / Flex

BASE MODEL	
IB	1/2-20 UNF 2A Jam Bushing

PRESSURE RANGE			
RH	500 PSI	UV	50 BAR
RJ	600 PSI	UX	75 BAR
RK	750 PSI	UY	100 BAR
RM	1,000 PSI	UZ	150 BAR
RO	1,500 PSI	VA	200 BAR
RR	2,000 PSI	VB	300 BAR
RS	2,500 PSI	VC	350 BAR
RT	3,000 PSI	VD	500 BAR
RV	5,000 PSI	VE	700 BAR
RX	7,500 PSI	VF	750 BAR
RZ	10,000 PSI	UA	1,000 BAR
SB	15,000 PSI	UH	1,400 BAR
SD	20,000 PSI	UB	1,500 BAR
SF	30,000 PSI	UC	2,000 BAR
SZ	_____ PSI Custom	SZ	_____ BAR Custom

CONNECTOR OPTIONS	
AA	6-Pin Bendix (PTIH-10-6P)
CC	8-pin Bendix (PCO2E-12-8P)
CF	1/2" NPT (M) Thread with 36" Leads

CAPILLARY TUBE LENGTH	
AA	18 inch (457.2 mm) Flex
HS	9 inch (228.6 mm) Flex
HY	12 inch (304.8 mm) Flex
HV	24 inch (609.6 mm) Flex
GT	30 inch (762 mm) Flex

DIAPHRAGM OPTIONS	
AA	17-4 SS GPX Coated Diaphragm
GK1	Inconel Coated Diaphragm
GP	Hastelloy C-276 Coated Diaphragm
NK	Reinforced Diaphragm
NL	Double Thick Diaphragm
QS2	Titanium Nitride Coated Diaphragm

FILL TYPES	
AA	Mercury Fill (750°F Max)
QJ	NaK Fill (750°F Max)
GW	NaK Fill with Inconel Diaphragm (1000°F Max)
GX	Mineral Oil Fill (500°F Max)

Please contact the factory on all critical dimensions and specifications for verification.

IMH SERIES PRESSURE TRANSMITTER

MODELS M, V, AND C

APPLICATIONS

- INJECTION MOLDING
- HYDRAULIC
- PNEUMATIC

FEATURES

- CHOICE OF ELECTRICAL OUTPUTS
- AVAILABLE ELECTRICAL CONNECTIONS: 6-PIN, HIRSCHMAN, AND LEADS
- SMALL SIZE (1.5" OD X 3.75" LONG)

PRESSURE RANGES

- FROM 0-100 THROUGH 0-15,000 PSIG

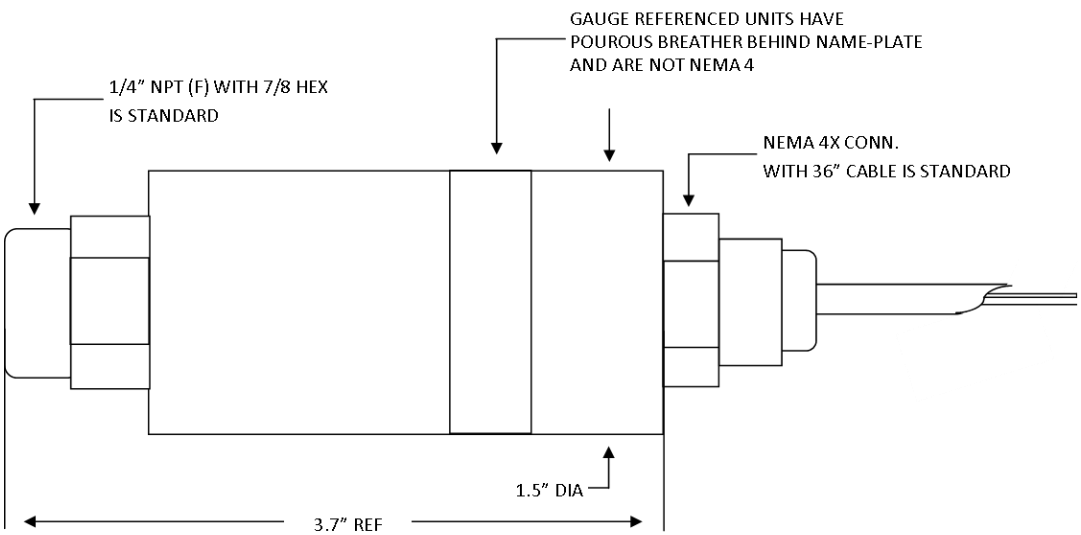

GP:50 reserves the right to make product improvements and amendments to the product specification stated throughout this brochure without prior notification.

SPECIFICATIONS

Output Span Tolerance	**±1.0% FSO at 70°F**		
Pressure Type (Standard)	Gauge/Non-Hermetic Seal (0-300 PSI and above) Gauge/Direct/Cable Vented (Below 0-300 PSI)		
Zero Balance	**±1.0% FSO at 70°F**		
Wetted Material	316 and 15-5 PH Stainless Steel		
Accuracy	**0.2% (Includes hysteresis, non-linearity, and repeatability)**		
Temperature Limits			
Compensated	0°F to +180°F		
Operating	-20° to +190°F		
Storage	-20° to +250°F		
Electricals	**M-Spike**	**V-Spike**	**C-Spike**
Excitation Voltage	3.5-15 Vdc	9-40 Vdc (14.5-32 for 0-10V)	9-40 Vdc
Output at 70°F	3.0 mV/V	0-5 Vdc	4-20 mA
Input Impedance	5,000 ohms nominal, full bridge		
Input Current		8 mA nominal	
Load Impedance	50,000 ohms min., for ≤ 0.1% FSO Attenuation		1,200 ohms max., 37 Vdc and 600 ohms Max. at 24 Vdc
Output Current		2.0 mA max. for ≤ 0.1% FSO attenuation	
Calibration Signal	Resistance value provided on calibration card for 100% FSO		
Mechanicals			
Proof Pressure	3x full scale pressure range or 22,500 PSI, whichever is less		
Burst Pressure	5x full scale pressure range or 23,500 PSI, whichever is less		
Weight	10 oz. nominal		
Connections	**Pressure**	**Electrical**	
	1/4" NPT (F) Standard	3' Polyurethane-jacketed, conductor cable (24 AWG Std)	
Enclosed Materials	316 Stainless Steel		

ORDERING GUIDE

Example P/N: M-IMH-C-PZ

MODEL: X—IMH—X—XX—XX / XX

ELECTRICAL OUTPUT	
M	3.33 mV/V
V	0—10 Vdc
C	4—20 mA

ACCURACY	
C	0.2% FSO
D	0.1% FSO

PRESSURE RANGE			
PZ	100 PSI	RM	1,000 PSI
RB	150 PSI	RO	1,500 PSI
RD	200 PSI	RR	2,000 PSI
RE	250 PSI	RS	2,500 PSI
RF	300 PSI	RT	3,000 PSI
RH	500 PSI	RV	5,000 PSI
RJ	600 PSI	RX	7,500 PSI
RK	750 PSI	RZ	10,000 PSI
SZ	_____ PSI Custom	SB	15,000 PSI

PRESSURE PORTS	
Blank	1/4" NPT (F)
FL	1/8" NPT (M)
FJ	1/4" NPT (M)
LH	SAE (6) (M) SAE (4) (M)

CONNECTOR OPTIONS	
Blank	NEMA-4
CA	6-Pin Bendix (or equiv.) Not recommended for ranges below 0-3,000 PSI. Consult Factory
CF	DIN 43650 (w/mate) Hirschman type

Please contact the factory on all critical dimensions and specifications for verification.

PLASTIC MELT PRESSURE TRANSDUCER/TRANSMITTER KITS

GP:50 Melt-Kits come with everything you need for efficient and reliable extrusion pressure measurement.
Melt Kits include Transducer, Cable, Indicator and more.

KITS AVAILABLE

STARTER MELT KIT:

To start your electronic pressure measurement
- Model V162 Pressure Transducer
- GPR700 Digital Indicator
- Connecting Cable, 20'
- Mounting Hole Machining Tool Kit
- Anti-Seize Compound
- Getting Started Guide
- Promo Item

CLASSIC MELT KIT:

Ideal for processors currently measuring pressure
- Model V162 or V163 Pressure Transducer
- GPR700 Digital Indicator
- Connecting Cable, 20'
- Anti-Seize Compound
- Getting Started Guide
- Promo Item

TEMPERATURE/PRESSURE MELT KIT:

Ideal for processors with temperature and pressure measurement requirements
- Model V164 Temperature/Pressure Transducer
- GPR700 Digital Indicator
- Connecting Cable, 20'
- Mating Thermocouple Connector
- Anti-Seize Compound
- Getting Started Guide
- Promo Item

DIFFERENTIAL MELT KIT:

Ideal for processors who measure and control differential pressure
- Two V163 Pressure Transducers
- 1235 Process Controller
- Two Connecting Cable, 20'
- Anti-Seize Compound
- Getting Started Guide
- Promo Item

Starter Melt-Kit MODEL 1310	Classic Melt-Kit MODEL 1311	Temperature/ Pressure Melt-Kit MODEL 1312	Differential Melt-Kit MODEL 1313
Ex: 1310-V162-RX-AA	Ex: 1311-V162-RX-AA	Ex: 1312-V164-RX-AA	Ex: 1313-V163-RX-AA
Transducer	**Transducer**	**Transducer**	**Transducer**
V162 3.33 mV/V	V162 3.33 mV/V V163 3.33 mV/V	V164 3.33 mV/V	V163 3.33 mV/V

Pressure Ranges (PSI)
RH—500
RK—750
RM– 1000
RO—1500
RT—3000
RV—5000
RX—7500
RZ—10000

GP:50 reserves the right to make product improvements and amendments to the product specification stated throughout this brochure without prior notification.

ASF Fill

Interchangeable with other competitive brands, the GP:50 Melt Pressure ASF non-mercury melt pressure transducers offer high accuracy, advanced quality construction, and available FM-Approved for hazardous environments and FDA approved for food packaging, and medical applications.

The ASF filled melt pressure transducers are available in a variety of melt pressure sensor configurations including choices of mechanical connections, electrical outputs, HART capability, and Smart temperature compensation.

Noted characteristics of the GP:50 ASF non-mercury sensors include superior thermal properties, and excellent response.

Industry fill-medium options have been introduced, but proven to offer shorter life duration, degradation, and some considered combustible or flammable.

Additional GP:50 sensor improvements are a proprietary matched membrane system to promote longer tip diaphragm life eliminating diaphragm hysteresis, known to promote diaphragm failures.

Advanced Safe Fill

Quality Construction and Reliability

Non-Mercury, Green and Safe for the Environment!

FM Approved for Hazardous Environments

Specifically regarding melt pressure measurement sensors, a common request for reliable instruments that incorporate superior accuracy and reliability, yet are non-mercury, has become a higher priority.

GP:50 Melt Pressure has incorporated the ASF fill-medium which provides a non-toxic pressure sensor providing long life, totally safe, and non-flammable.

GP:50 Melt Pressure dedicated years of development of the ASF fill-medium offering superior and repeatable performance of mercury, without the health and environmental issues that come along with it.

Available Options:

Superior Coilflex

Vibration Protection

HART Communication

Premium Temp Compensation

Multi-Ranging

Fill-Medium Materials: ASF is defined as safe substance (GRAS), meets requirements for RoHS Directive, IMERC (Interstate Mercury Education and Reduction Clearinghouse) initiatives, and Factory Mutual compliance.

Please contact the factory on all critical dimensions and specifications for verification.