Air Heaters

Air Heaters	Sheath Materials	Max. Operating Temperatures °F	°C	Typical Max. Watt Densities W/in²	W/cm²	Page
Duct Heaters						
LDH SERIES and D SERIES	Alloy 840	1200	650	30	4.7	**377**
MDH SERIES	Alloy 840	1200	650	26	4.0	**391**
Finned						
375 Finned Strip	Aluminized steel	1100	595	33	5.1	**395**
FINBAR™ Single-Ended	304 stainless steel	1200	650	50	7.7	**401**
FIREROD® Cartridge	Alloy 800	Application Specific		100	15.5	**402**
Enclosure Heaters						
WATROD™	Alloy 840	390	200	15	2.3	**403**
Silicone Rubber	Fiberglass reinforced silicone rubber	500	260	5	0.8	**405**
FLUENT® In-line	444 stainless steel (substrate tube), 316L stainless steel (baffle and fittings)	482 (internal)	250	150	23	**408**

Duct Heaters

LDH SERIES and D SERIES

Constructed of sturdy 0.430 in. (11 mm) diameter WATROD™ heating elements mounted to a 1/4 in. (6 mm) thick steel flange, duct heaters are easily adapted to many non-pressurized air-heating systems.

They are easily installed in applications requiring a wide range of temperature versus air flow combinations.

The modular duct heater offers increased reliability. The individual modules are removable through the housing of the assembly, which eliminates the need to pull the complete heater from the duct work. This reduces downtime costs because the heating elements can be replaced individually. Performance improvements include quicker response time and reduced infiltration from the air stream being heated into the electrical enclosure.

Watlow® duct heaters offer advantages over gas or oil fired and open coil electric units with:

- Installation flexibility—no flues or fuel lines
- 100 percent energy efficient—no energy loss up the flue
- Universal availability of electricity
- Resistance coil in sheath is protected from corrosive environments

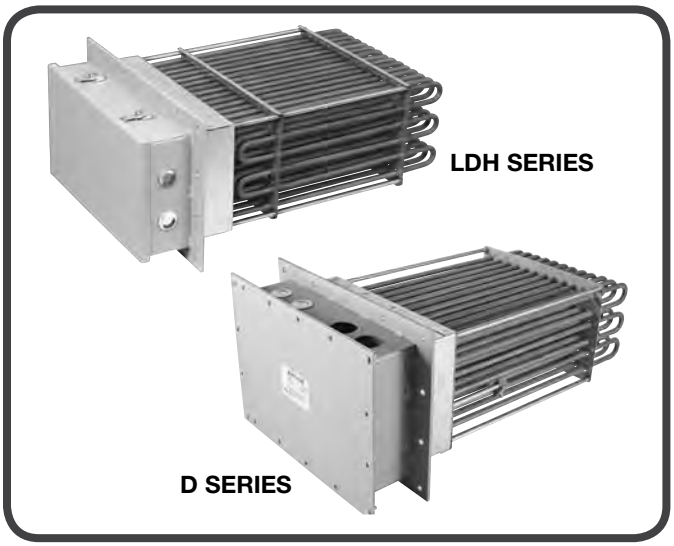

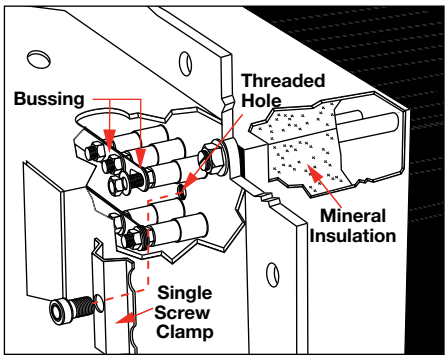

Performance Capabilities

- Watt densities up to 40 W/in^2 (6.2 W/cm^2)
- Recommended process temperatures from -20 to 1200°F (-29 to 650°C)
- Catalog P/N wattages up to 225kW
- Voltages up to 600VAC

Features and Benefits

Long life alloy 840 sheath
- Resists corrosion/oxidation while protecting resistance coils against contamination

MgO insulation filled elements compacted to rock hard density
- Maximizes dielectric strength, heat transfer and life

Field replaceable heating elements
- Permits easy service and reduces downtime. Element change-out is made simple by a single screw clamp (D SERIES only)

3 1/2 in. (90 mm) thick mineral insulation
- Keeps wiring cooler and reduces heat loss

Silicone resin seals rated to 221°F (105°C)
- Protects elements against moisture and other contaminants

General purpose terminal enclosure
- Offers easy access to wiring

1/4 in. (6 mm) inside diameter thermowell
- Accepts an optional Type J or K thermocouple for accurate sheath temperature sensing (D SERIES only)

Rigid stainless steel supports
- Prevents element sagging or deformation in various mounting positions

1/4 in. (6 mm) thick steel flange with 3/8 in. (9.5 mm) diameter mounting holes
- Easily bolts to the duct wall

WATROD hairpins are repressed (recompacted) after bending to assure MgO density
- Eliminates hot spots and electrical insulation voids

Stock heaters feature from three to 60 elements
- Meets a wide variety of kilowatt demands

One or three phase voltages
- Meets local power supplies

Maximum 48 amperes per circuit
- Complies with National Electrical Code (NEC)

Duct heaters with general purpose enclosures meet UL® and CSA component recognition to 480 and 600VAC maximum respectively—UL® and CSA file numbers are E52951 and 31388

Duct Heaters

LDH SERIES and D SERIES

Typical Applications

- Drying ovens
- Autoclaves
- Furnaces
- Load banks
- Heat treating
- Reheating
- HVAC
- Paint drying

Choosing a Duct Heater

The English and metric graphs, shown on the following pages, will help you to select the correct duct heater. These graphs include: *Watt Density vs. Air Temperature/ Velocity, Watt Density vs. Sheath Temperature and Pressure Drop vs. Air Velocity*.

These graphs, with the quick formulas on this page, along with information specific to your application, will determine the correct duct heater specifications. However, if engineering assistance is needed, contact your Watlow representative.

Required Application Information

- Desired outlet air temperature
- Inlet air temperature
- Delta T—the temperature difference between inlet and desired outlet temperature
- Air volume (CFM/CMM) measured at both inlet temperature and pressure
- Air velocity in feet per minute (FPM); meters per minute (MPM) which equals:

English

$$\text{FPM} = \frac{\text{CFM measured at standard conditions}}{\text{Duct cross section area at heater in ft}^2}$$

Metric

$$\text{MPM} = \frac{\text{CMM measured at normal conditions}}{\text{Duct cross section area at heater in m}^2}$$

- Minimum duct heater wattage (kW). This can be determined by:

English

$$\text{kW} = \frac{\text{CFM x Delta T (°F) x 1.1 (safety factor)}}{3000}$$

Metric

$$\text{kW} = \frac{\text{CMM x Delta T (°C) x 1.1 (safety factor)}}{48}$$

Note: The duct heater, or combination of duct heaters, used for the process should be equal to or exceed the minimum wattage calculation.

Duct Heaters

LDH SERIES and D SERIES

Watt Density vs. Air Temperature/Velocity

To decide watt density requirements, first determine the desired outlet air temperature and velocity in feet per minute. Then, follow the lines on the graph for velocity and process temperature to the watt density curve's intersecting point. This shows the recommended watt density based on a maximum sheath temperature of 1400°F (760°C). **For longer heater life, lower watt densities should be chosen.**

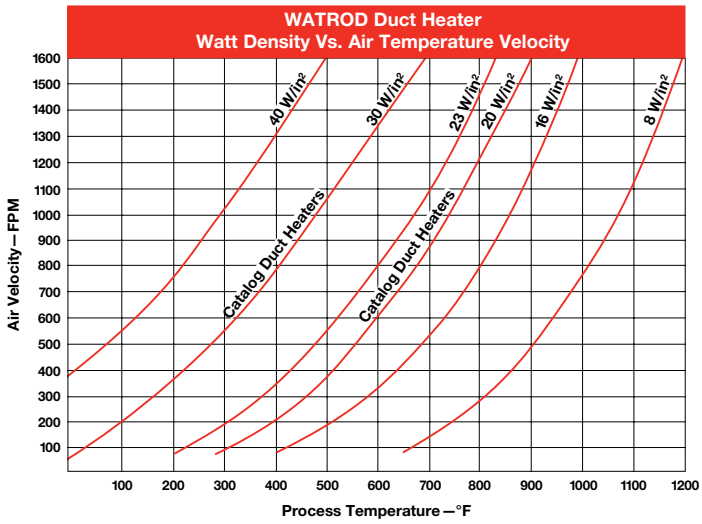

Estimated Sheath Temperature = 1400°F

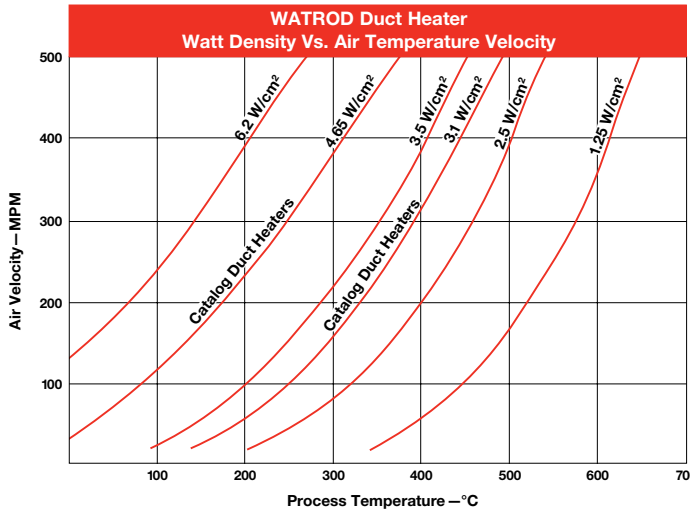

Estimated Sheath Temperature = 760°C

Watt Density vs. Sheath Temperature

The *Watt Density vs. Sheath Temperature* graph shows the air velocity (FPM or MPM) required to operate a WATROD duct heater at specific watt densities or sheath temperatures. Also depicted is the appropriate watt density vs. sheath temperature at a specified air flow.

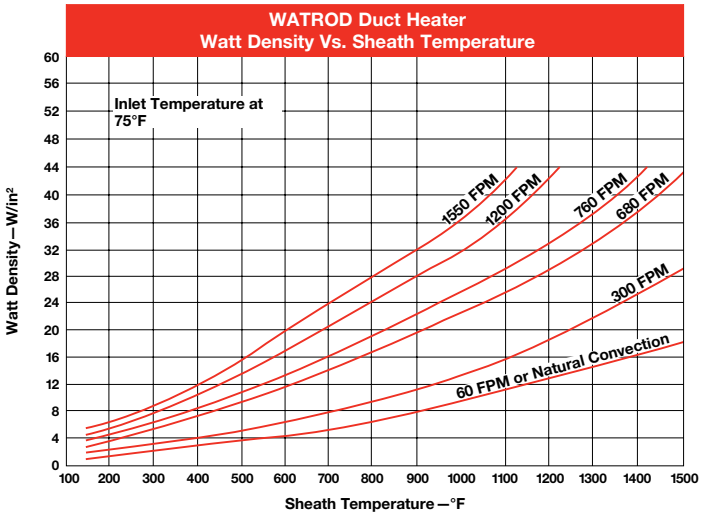

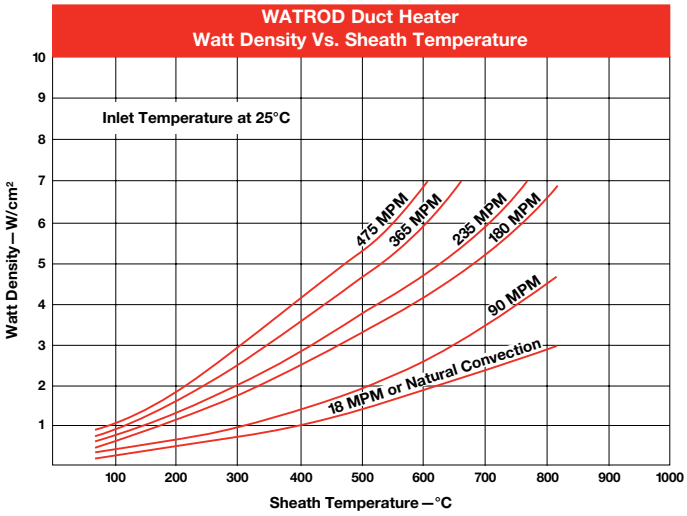

Duct Heaters

LDH SERIES and D SERIES

Pressure Drop vs. Air Velocity

The rate at which pressure drops through the duct heater is critical for properly sizing blowers and pumps. *The Pressure Drop vs. Air Velocity* graph gives recommended maximum velocities in feet per minute and meters per minute according to the air velocity and duct heater size.

To determine the pressure drop through the duct heater, follow the air velocity (FPM or MPM) over to the appropriate curve, which identifies the duct heater size. Then, take the intersecting point down to the approximate pressure drop value.

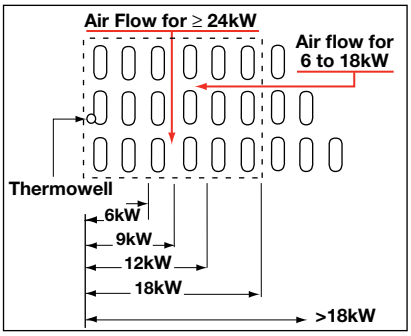

Note: Viewing from the element ends—the recommended air flow direction through element bundle changes at >18kW.

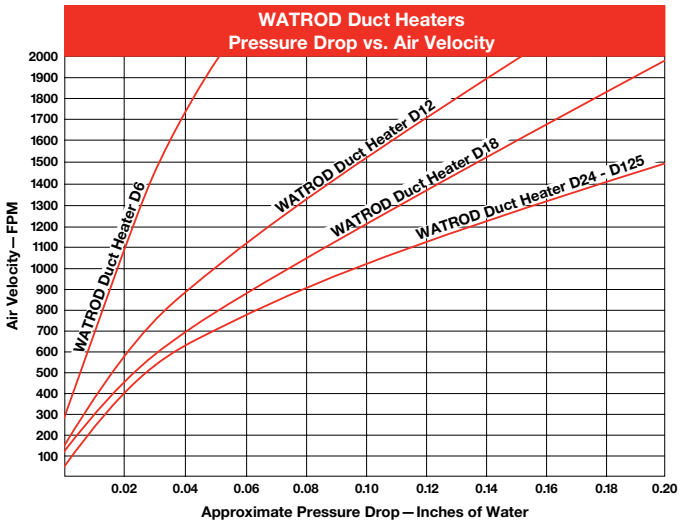

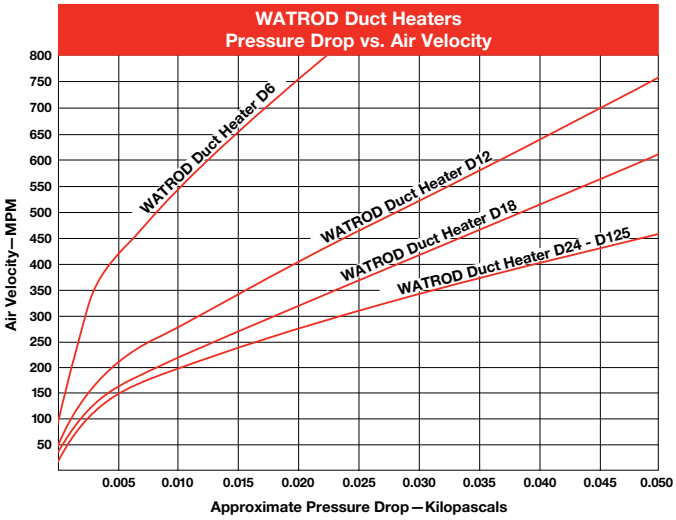

Options

WATCONNECT® Standard Control Panels

WATCONNECT® standard control panels are configured to work with Watlow's duct heaters. They are quickly configured for process heating applications and delivered within two weeks. WATCONNECT panels integrate Watlow's high-quality heater, sensor, temperature controller and power controller products for a complete thermal solution. Normally, competitive custom panels require significantly longer lead times. The broad range of standard features allow customers to quickly configure panels for each process heater included in this catalog.

Features and Benefits

Lead times of two weeks or less
- Provides faster delivery than competition

Full documentation provided for WATCONNECT control panels at the time of quotation
- Eliminates lengthy approval process and phone calls

Incorporates Watlow's temperature and power controllers
- Provides a turnkey solution for process heating applications

Range of standard input/output (I/O) options
- Provides the user with a higher level of monitoring and control assuring an efficient and safe operation

WATCONNECT enclosure easily mounts to wall or frame
- Decreases installation time

Duct Heaters

LDH SERIES and D SERIES

Options *(Continued)*

Note: The WATCONNECT part number associated with a heater is only a suggestion. The following installation details need to be compared to panel capabilities to assure a compatible match:

- Minimum and maximum ambient temperature where panel will be installed
- Statutory and regulatory requirements at installation site
- Sun loading, if any, at installation site
- Presence of any hazardous gases, dusts or fibers, if any
- Verification of process sensor type
- Verification of limit sensor type
- Input/Output (I/O) requirements

For additional product information see the WATCONNECT landing page at www.watlow.com/watconnect. On the WATCONNECT landing page you will find a complete specification sheet along with other tools to help you properly select your control panel. If you would like to know the specific configuration of a WATCONNECT part number, please use the Product Configuration Lookup Tool on Watlow.com.

Wattages/Voltages

To meet specific application needs, voltage and wattage combinations outside stock product parameters are available.

For more information about this option, contact your Watlow representative.

Terminal Enclosures

In addition to the standard, general purpose terminal enclosure, Watlow offers a moisture resistant optional terminal enclosure to meet specific application requirements.

Thermocouples

Type J or **K** thermocouples, inserted in the thermowell, accurately sense element sheath temperature for over-temperature conditions.

To sense process temperature, the sensing element should be located downstream from the duct heater. This will eliminate incorrect sensing caused by radiant heat.

Thermocouples are supplied with 120 in. (3050 mm) leads, longer lead lengths are available (this applies to "D" SERIES only). Unless otherwise specified, thermocouples are supplied with temperature ranges detailed on the *Thermocouple Types* chart.

Using a thermocouple requires an appropriate temperature and power controller. These must be purchased separately. Watlow offers a wide variety of temperature and power controllers to meet virtually all applications. Temperature controllers can be configured to accept process variable inputs, too. Contact your Watlow representative for details.

To order a thermocouple, add the appropriate suffix letter to the duct heater's base part number, as indicated on the *Ordering Information* chart on page 390.

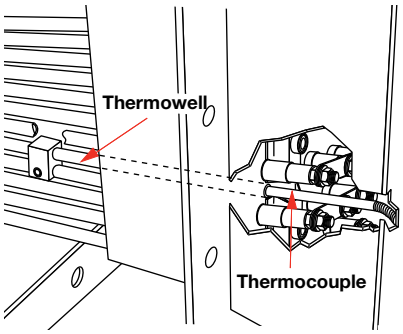

Duct heater thermowell holds thermocouple for sensing sheath temperature.

Thermocouple Types

ASTM Type	Conductor Characteristics Positive	Conductor Characteristics Negative	Recommended① Temperature Range °F	Recommended① Temperature Range (°C)
J	Iron (Magnetic)	Constantan (Non-magnetic)	0 to 1000	(-20 to 540)
K	Chromel® (Non-magnetic)	Alumel® (Magnetic)	0 to 2000	(-20 to 1100)

①**Type J** and **Type K** thermocouples are rated 32 to 1382°F and 32 to 2282°F (0-750°C and 0-1250°C), respectively. Watlow does not recommend exceeding temperature ranges shown on this chart for the tubular product line.

Application Hints

- Mount duct heaters horizontally to lower enclosure temperatures and promote unit life.
- Orient heating elements as per the air flow illustration on page 380.
- Promote heater life by keeping sheath temperature below the 1400°F (760°C) maximum.
- Measure process temperature in the outlet stream, away from the heater.
- Maintain wiring integrity by keeping enclosure temperature below 400°F (205°C).
- Thermal cycling can cause terminations to loosen. Periodically check and tighten all electrical connections.
- Size power feeder wires in accordance with NEC and other applicable codes.
- Protect employees against electrical shock by properly grounding the unit per NEC specifications.

EXTENDED CAPABILITY

Extended Capabilities for Duct Heaters

Performance Capabilities

- Wattages to 2.2 megawatts

Features and Benefits

Ceramic fiber insulation available

- Keeps wiring cooler and reduces heat loss

Greater than 1/4 in. (6 mm) with 304 or 316 stainless steel flange material

- Easily bolts to the duct wall

60 plus element designs available

- Meets a wide variety of kilowatt demands

Options

Sheath Material

Watlow duct heaters can be made with the following sheath materials:

- 304, 316, 321 SS
- Alloy 800
- Laminated alloy 600 (hi-temp)
- Hastelloy C276

Contact your Watlow representative for details and availability.

Terminal Enclosures

In addition to the standard, general purpose terminal enclosure, Watlow offers the following optional terminal enclosures to meet specific application requirements:

- Explosion resistant (contact your Watlow representative)
- High-temperature stand-off enclosures

Duct Heaters

LDH SERIES

Application: High Temperature Air 800°F (427°C)

- Welded alloy 840 WATROD elements
- Without thermostat
- General purpose enclosure
- Steel flange

① 3 and 6 element heaters have (1) 1 inch NPT conduit opening; 9, 12 and 15 element heaters have (2) 1 inch NPT conduit openings; 18 element heaters have (2) 1 1/2 inch NPT conduit openings; 21 element (B= 20 1/4 in.) heaters have (2) 1 1/2 inch NPT conduit openings; remaining 21 and 24 element heaters have (3) 1 1/2 inch NPT conduit openings

② All flanges are 12 inches wide

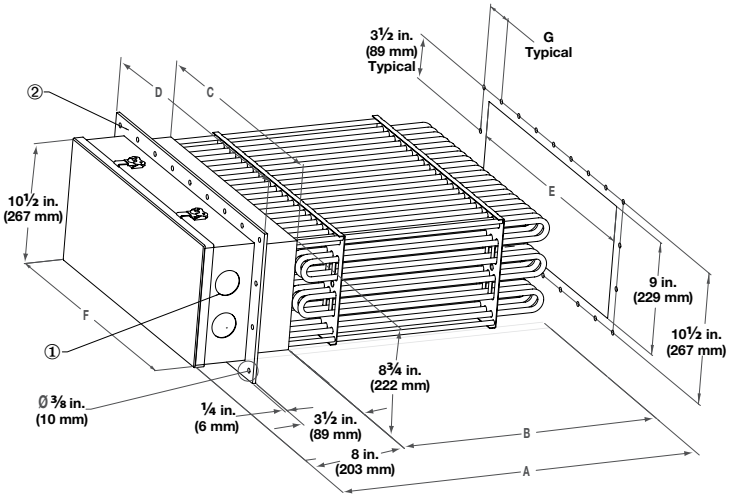

# of Elem	Volts	kW	Ph	# Circ	Part Number	WATCONNECT P/N J T/C	WATCONNECT P/N K T/C	Ship Wt. lbs (kg)	"A" Dim. in. (mm)	"B" Dim. in. (mm)	"C" Dim. in. (mm)	"D" Dim. in. (mm)	"E" Dim. in. (mm)	"F" Dim. in. (mm)	"G" Dim. in. (mm)
20 W/in² (3.1 W/cm²)															
3	240	9.0	1	1	**LDH9S10S**	**C/F**	**C/F**	55 (25)	28 1/4 (718)	20 1/4 (514)	3 3/4 (95)	7 1/2 (191)	4 (102)	4 5/8 (117.5)	3 (76)
3	240	9.0	3	1	**LDH9S3S**	**C2-50**	**C2-92**	55 (25)	28 1/4 (718)	20 1/4 (514)	3 3/4 (95)	7 1/2 (191)	4 (102)	4 5/8 (117.5)	3 (76)
3	480	9.0	1	1	**LDH9S11S**	**C/F**	**C/F**	55 (25)	28 1/4 (718)	20 1/4 (514)	3 3/4 (95)	7 1/2 (191)	4 (102)	4 5/8 (117.5)	3 (76)
3	480	9.0	3	1	**LDH9S5S**	**C2-43**	**C2-35**	55 (25)	28 1/4 (718)	20 1/4 (514)	3 3/4 (95)	7 1/2 (191)	4 (102)	4 5/8 (117.5)	3 (76)
6	240	18.0	1	2	**LDH18S10S**	**C/F**	**C/F**	65 (30)	28 1/4 (718)	20 1/4 (514)	6 3/4 (171)	10 1/2 (267)	7 (178)	7 5/8 (193.7)	3 (76)
6	240	18.0	3	1	**LDH18S3S**	**C2-236**	**C2-214**	65 (30)	28 1/4 (718)	20 1/4 (514)	6 3/4 (171)	10 1/2 (267)	7 (178)	7 5/8 (193.7)	3 (76)
6	480	18.0	1	1	**LDH18S11S**	**C/F**	**C/F**	65 (30)	28 1/4 (718)	20 1/4 (514)	6 3/4 (171)	10 1/2 (267)	7 (178)	7 5/8 (193.7)	3 (76)
6	480	18.0	3	1	**LDH18S5S**	**C2-43**	**C2-35**	65 (30)	28 1/4 (718)	20 1/4 (514)	6 3/4 (171)	10 1/2 (267)	7 (178)	7 5/8 (193.7)	3 (76)
9	240	27.0	1	3	**LDH27S10S**	**C/F**	**C/F**	120 (55)	28 1/4 (718)	20 1/4 (514)	9 3/4 (248)	13 1/2 (343)	10 (254)	10 5/8 (269.9)	3 (76)
9	240	27.0	3	3	**LDH27S3S**	**C4-143**	**C4-142**	120 (55)	28 1/4 (718)	20 1/4 (514)	9 3/4 (248)	13 1/2 (343)	10 (254)	10 5/8 (269.9)	3 (76)
9	480	27.0	1	3	**LDH27S11S**	**C/F**	**C/F**	120 (55)	28 1/4 (718)	20 1/4 (514)	9 3/4 (248)	13 1/2 (343)	10 (254)	10 5/8 (269.9)	3 (76)
9	480	27.0	3	1	**LDH27S5S**	**C2-225**	**C2-226**	120 (55)	28 1/4 (718)	20 1/4 (514)	9 3/4 (248)	13 1/2 (343)	10 (254)	10 5/8 (269.9)	3 (76)
12	240	36.0	1	4	**LDH36S10S**	**C/F**	**C/F**	135 (62)	28 1/4 (718)	20 1/4 (514)	12 3/4 (324)	16 1/2 (419)	13 (330)	13 5/8 (346.1)	3 (76)
12	240	36.0	3	2	**LDH36S3S**	**C2-218**	**C2-224**	135 (62)	28 1/4 (718)	20 1/4 (514)	12 3/4 (324)	16 1/2 (419)	13 (330)	13 5/8 (346.1)	3 (76)
12	480	36.0	1	2	**LDH36S11S**	**C/F**	**C/F**	135 (62)	28 1/4 (718)	20 1/4 (514)	12 3/4 (324)	16 1/2 (419)	13 (330)	13 5/8 (346.1)	3 (76)
12	480	36.0	3	1	**LDH36S5S**	**C2-225**	**C2-226**	135 (62)	28 1/4 (718)	20 1/4 (514)	12 3/4 (324)	16 1/2 (419)	13 (330)	13 5/8 (346.1)	3 (76)
15	240	45.0	3	5	**LDH45S3S**	**C4-144**	**C4-145**	195 (89)	28 1/4 (718)	20 1/4 (514)	15 3/4 (400)	19 1/2 (495)	16 (406)	17 7/8 (454.0)	3 (76)
15	480	45.0	1	3	**LDH45S11S**	**C/F**	**C/F**	195 (89)	28 1/4 (718)	20 1/4 (514)	15 3/4 (400)	19 1/2 (495)	16 (406)	17 7/8 (454.0)	3 (76)
15	480	45.0	3	5	**LDH45S5S**	**C4-150**	**C4-151**	195 (89)	28 1/4 (718)	20 1/4 (514)	15 3/4 (400)	19 1/2 (495)	16 (406)	17 7/8 (454.0)	3 (76)
18	240	54.0	3	3	**LDH54S3S**	**C4-144**	**C4-145**	205 (93)	28 1/4 (718)	20 1/4 (514)	18 3/4 (476)	22 1/2 (572)	19 (483)	20 7/8 (530.2)	3 (76)
18	480	54.0	1	3	**LDH54S11S**	**C/F**	**C/F**	205 (93)	28 1/4 (718)	20 1/4 (514)	18 3/4 (476)	22 1/2 (572)	19 (483)	20 7/8 (530.2)	3 (76)
18	480	54.0	3	2	**LDH54S5S**	**C2-229**	**C2-230**	205 (93)	28 1/4 (718)	20 1/4 (514)	18 3/4 (476)	22 1/2 (572)	19 (483)	20 7/8 (530.2)	3 (76)
21	240	63.0	3	7	**LDH63S3S**	**C4-148**	**C4-149**	235 (107)	28 1/4 (718)	20 1/4 (514)	21 3/4 (552)	25 1/2 (648)	22 (559)	23 7/8 (606.4)	3 (76)
21	480	63.0	1	3	**LDH63S11S**	**C/F**	**C/F**	235 (107)	28 1/4 (718)	20 1/4 (514)	21 3/4 (552)	25 1/2 (648)	22 (559)	23 7/8 (606.4)	3 (76)
21	480	63.0	3	7	**LDH63S5S**	**C4-154**	**C4-155**	235 (107)	28 1/4 (718)	20 1/4 (514)	21 3/4 (552)	25 1/2 (648)	22 (559)	23 7/8 (606.4)	3 (76)
21	240	79.0	3	7	**LDH79S3S**	**C/F**	**C/F**	260 (118)	33 (838)	25 (635)	21 3/4 (552)	25 1/2 (648)	22 (559)	23 7/8 (606.4)	3 (76)
21	480	79.0	1	7	**LDH79S11S**	**C/F**	**C/F**	260 (118)	33 (838)	25 (635)	21 3/4 (552)	25 1/2 (648)	22 (559)	23 7/8 (606.4)	3 (76)
21	480	79.0	3	7	**LDH79S5S**	**C4-156**	**C4-157**	260 (118)	33 (838)	25 (635)	21 3/4 (552)	25 1/2 (648)	22 (559)	23 7/8 (606.4)	3 (76)
21	240	105.0	3	7	**LDH105S3S**	**C/F**	**C/F**	290 (132)	40 1/2 (1029)	32 1/2 (826)	21 3/4 (552)	25 1/2 (648)	22 (559)	23 7/8 (606.4)	3 (76)
21	480	105.0	1	7	**LDH105S11S**	**C/F**	**C/F**	290 (132)	40 1/2 (1029)	32 1/2 (826)	21 3/4 (552)	25 1/2 (648)	22 (559)	23 7/8 (606.4)	3 (76)
21	480	105.0	3	7	**LDH105S5S**	**C4-156**	**C4-157**	290 (132)	40 1/2 (1029)	32 1/2 (826)	21 3/4 (552)	25 1/2 (648)	22 (559)	23 7/8 (606.4)	3 (76)
21	480	131.0	3	7	**LDH131S5S**	**C4-156**	**C4-157**	310 (141)	49 1/2 (1257)	41 1/2 (1054)	21 3/4 (552)	25 1/2 (648)	22 (559)	23 7/8 (606.4)	3 (76)
24	480	150.0	3	4	**LDH150S5S**	**C4-156**	**C4-157**	330 (150)	49 1/2 (1257)	41 1/2 (1054)	24 3/4 (629)	28 1/2 (724)	25 (635)	26 7/8 (682.6)	3 (76)

Notes:

- See *Watt Density vs. Air Temperature/Velocity* charts on page 379 to confirm suitability in the application.

C/F - Contact factory, go to www.watlow.com/en/contact-us

Duct Heaters

LDH SERIES

Application: Medium Temperature Air 750°F (399°C)

- Welded alloy 840 WATROD elements
- Without thermostat
- General purpose enclosure
- Steel flange

① 3 and 6 element heaters have (1) 1 inch NPT conduit opening; 9, 12 and 15 element heaters have (2) 1 inch NPT conduit openings; 18 element heaters have (2) 1 1/2 inch NPT conduit openings; 21 element (B= 20 1/4 in.) heaters have (2) 1 1/2 inch NPT conduit openings; remaining 21 and 24 element heaters have (3) 1 1/2 inch NPT conduit openings

② All flanges are 12 inches wide

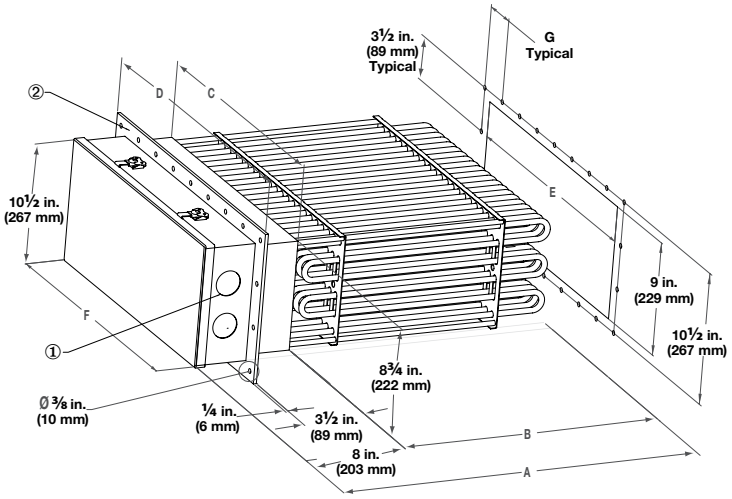

# of Elem	Volts	kW	Ph	# Circ	Part Number	WATCONNECT P/N J T/C	WATCONNECT P/N K T/C	Ship Wt. lbs. (kg)	"A" Dim. in. (mm)	"B" Dim. in. (mm)	"C" Dim. in. (mm)	"D" Dim. in. (mm)	"E" Dim. in. (mm)	"F" Dim. in. (mm)	"G" Dim. in. (mm)
30 W/in² (4.7 W/cm²)															
3	240	14.0	1	3	**LDH14SX10S**	**C/F**	**C/F**	55 (25)	28 1/4 (718)	20 1/4 (514)	3 3/4 (95)	7 1/2 (191)	4 (102)	4 5/8 (117.5)	3 (76)
3	240	14.0	3	1	**LDH14SX3S**	**C2-236**	**C2-214**	55 (25)	28 1/4 (718)	20 1/4 (514)	3 3/4 (95)	7 1/2 (191)	4 (102)	4 5/8 (117.5)	3 (76)
3	480	14.0	1	1	**LDH14SX11S**	**C/F**	**C/F**	55 (25)	28 1/4 (718)	20 1/4 (514)	3 3/4 (95)	7 1/2 (191)	4 (102)	4 5/8 (117.5)	3 (76)
3	480	14.0	3	1	**LDH14SX5S**	**C2-43**	**C2-35**	55 (25)	28 1/4 (718)	20 1/4 (514)	3 3/4 (95)	7 1/2 (191)	4 (102)	4 5/8 (117.5)	3 (76)
6	240	27.0	1	3	**LDH27SX10S**	**C/F**	**C/F**	65 (30)	28 1/4 (718)	20 1/4 (514)	6 3/4(171)	10 1/2 (267)	7 (178)	7 5/8 (193.7)	3 (76)
6	240	27.0	3	2	**LDH27SX3X**	**C2-218**	**C2-224**	65 (30)	28 1/4 (718)	20 1/4 (514)	6 3/4(171)	10 1/2 (267)	7 (178)	7 5/8 (193.7)	3 (76)
6	480	27.0	1	2	**LDH27SX11S**	**C/F**	**C/F**	65 (30)	28 1/4 (718)	20 1/4 (514)	6 3/4(171)	10 1/2 (267)	7 (178)	7 5/8 (193.7)	3 (76)
6	480	27.0	3	1	**LDH27SX5S**	**C2-225**	**C2-226**	65 (30)	28 1/4 (718)	20 1/4 (514)	6 3/4(171)	10 1/2 (267)	7 (178)	7 5/8 (193.7)	3 (76)
9	240	41.0	3	3	**LDH41SX3S**	**C4-144**	**C4-145**	120 (55)	28 1/4 (718)	20 1/4 (514)	9 3/4(248)	13 1/2 (343)	10 (254)	10 5/8 (269.9)	3 (76)
9	480	41.0	1	3	**LDH41SX11S**	**C/F**	**C/F**	120 (55)	28 1/4 (718)	20 1/4 (514)	9 3/4(248)	13 1/2 (343)	10 (254)	10 5/8 (269.9)	3 (76)
9	480	41.0	3	3	**LDH41SX5S**	**C4-150**	**C4-151**	120 (55)	28 1/4 (718)	20 1/4 (514)	9 3/4(248)	13 1/2 (343)	10 (254)	10 5/8 (269.9)	3 (76)
12	240	54.0	3	4	**LDH54SX3S**	**C4-148**	**C4-149**	135 (62)	28 1/4 (718)	20 1/4 (514)	12 3/4(324)	16 1/2 (419)	13 (330)	13 5/8 (346.1)	3 (76)
12	480	54.0	1	3	**LDH54SX11S**	**C/F**	**C/F**	135 (62)	28 1/4 (718)	20 1/4 (514)	12 3/4(324)	16 1/2 (419)	13 (330)	13 5/8 (346.1)	3 (76)
12	480	54.0	3	2	**LDH54SX5S**	**C2-229**	**C2-230**	135 (62)	28 1/4 (718)	20 1/4 (514)	12 3/4(324)	16 1/2 (419)	13 (330)	13 5/8 (346.1)	3 (76)
15	240	68.0	3	5	**LDH68SX3S**	**C/F**	**C/F**	195 (89)	28 1/4 (718)	20 1/4 (514)	15 3/4(400)	19 1/2 (495)	16 (406)	17 7/8 (454.0)	3 (76)
15	480	68.0	1	3	**LDH68SX11S**	**C/F**	**C/F**	195 (89)	28 1/4 (718)	20 1/4 (514)	15 3/4(400)	19 1/2 (495)	16 (406)	17 7/8 (454.0)	3 (76)
15	480	68.0	3	5	**LDH68SX5S**	**C4-152**	**C4-153**	195 (89)	28 1/4 (718)	20 1/4 (514)	15 3/4(400)	19 1/2 (495)	16 (406)	17 7/8 (454.0)	3 (76)
18	240	80.0	3	6	**LDH80SX3S**	**C/F**	**C/F**	205 (93)	28 1/4 (718)	20 1/4 (514)	18 3/4(476)	22 1/2 (572)	19 (483)	20 7/8 (530.2)	3 (76)
18	480	80.0	1	6	**LDH80SX11S**	**C/F**	**C/F**	205 (93)	28 1/4 (718)	20 1/4 (514)	18 3/4(476)	22 1/2 (572)	19 (483)	20 7/8 (530.2)	3 (76)
18	480	80.0	3	3	**LDH80SX5S**	**C4-152**	**C4-153**	205 (93)	28 1/4 (718)	20 1/4 (514)	18¾(476)	22 1/2 (572)	19 (483)	20 7/8 (530.2)	3 (76)
21	240	95.0	3	7	**LDH95SX3S**	**C/F**	**C/F**	235 (107)	28 1/4 (718)	20 1/4 (514)	21 3/4(552)	25 1/2 (648)	22 (559)	23 7/8 (606.4)	3 (76)
21	480	95.0	1	7	**LDH95SX11S**	**C/F**	**C/F**	235 (107)	28 1/4 (718)	20 1/4 (514)	21 3/4(552)	25 1/2 (648)	22 (559)	23 7/8 (606.4)	3 (76)
21	480	95.0	3	7	**LDH95SX5S**	**C4-156**	**C4-157**	235 (107)	28 1/4 (718)	20 1/4 (514)	21 3/4(552)	25 1/2 (648)	22 (559)	23 7/8 (606.4)	3 (76)
21	240	120.0	3	7	**LDH120SX3S**	**C/F**	**C/F**	260 (118)	33 (838)	25 (635)	21 3/4(552)	25 1/2 (648)	22 (559)	23 7/8 (606.4)	3 (76)
21	480	120.0	1	7	**LDH120SX11S**	**C/F**	**C/F**	260 (118)	33 (838)	25 (635)	21 3/4(552)	25 1/2 (648)	22 (559)	23 7/8 (606.4)	3 (76)
21	480	120.0	3	7	**LDH120SX5S**	**C4-156**	**C4-157**	260 (118)	33 (838)	25 (635)	21 3/4(552)	25 1/2 (648)	22 (559)	23 7/8 (606.4)	3 (76)
21	480	160.0	3	7	**LDH160SX5S**	**C/F**	**C/F**	290 (132)	40 1/2(1029)	32 1/2 (826)	21 3/4(552)	25 1/2 (648)	22 (559)	23 7/8 (606.4)	3 (76)
21	480	200.0	3	7	**LDH200SX5S**	**C/F**	**C/F**	310 (141)	49 1/2(1257)	41 1/2(1054)	21 3/4(552)	25 1/2 (648)	22 (559)	23 7/8 (606.4)	3 (76)
24	480	225.0	3	8	**LDH225SX5S**	**C/F**	**C/F**	330 (150)	49 1/2(1257)	41 1/2(1054)	24 3/4(629)	28 1/2 (724)	25 (635)	26 7/8 (682.6)	3 (76)

Notes:

- See *Watt Density vs. Air Temperature/Velocity* charts on page 379 to confirm suitability in the application.

C/F - Contact factory, go to www.watlow.com/en/contact-us

Duct Heaters

D SERIES

Application: High Temperature Air 800°F (427°C)

- Removable alloy 840 WATROD elements
- Without thermostat
- General purpose enclosure
- Steel flange

① 6 and 12 element heaters have (1) 1 inch NPT conduit opening; 18, 24, 30 and 42 element heaters have (2) 1 inch NPT conduit openings; 36, 48, 54 and 60 element heaters have (2) 1 inch NPT and (2) 1 1/4 inch conduit openings

② All flanges are 12 inches wide

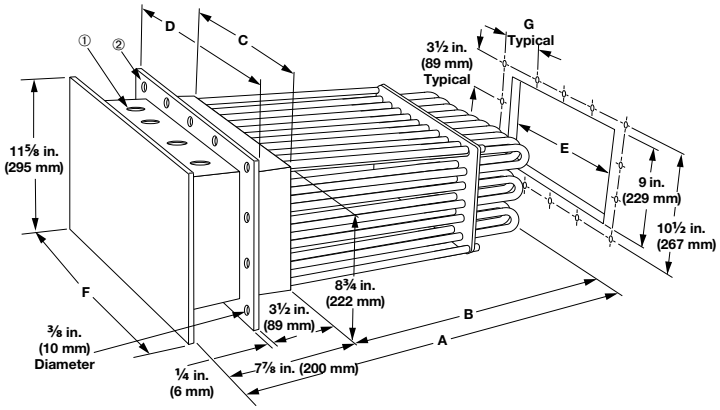

# of Elem.	Volts	kW	Ph	# Circ	Part Number	WATCONNECT P/N J T/C	WATCONNECT P/N K T/C	Ship Wt. lbs. (kg)	"A" Dim. in. (mm)	"B" Dim. in. (mm)	"C" Dim. in. (mm)	"D" Dim. in. (mm)	"E" Dim. in. (mm)	"F" Dim. in. (mm)	"G" Dim. in. (mm)
20 W/in² (3.1 W/cm²)															
6	240	6.0	1	1	**D6S10S**	**C/F**	**C/F**	50 (23)	27 7/8 (708)	20 (508)	2 3/4 (70)	6 1/2 (165)	3 (76)	5 3/4 (146)	2 1/2 (64)
6	240	6.0	3	1	**D6S3S**	**C2-50**	**C2-92**	50 (23)	27 7/8 (708)	20 (508)	2 3/4 (70)	6 1/2 (165)	3 (76)	5 3/4 (146)	2 1/2 (64)
6	480	6.0	1	1	**D6S11S**	**C/F**	**C/F**	50 (23)	27 7/8 (708)	20 (508)	2 3/4 (70)	6 1/2 (165)	3 (76)	5 3/4 (146)	2 1/2 (64)
6	480	6.0	3	1	**D6S5S**	**C2-43**	**C2-35**	50 (23)	27 7/8 (708)	20 (508)	2 3/4 (70)	6 1/2 (165)	3 (76)	5 3/4 (146)	2 1/2 (64)
12	240	12.0	1	1	**D12S10S**	**C/F**	**C/F**	55 (25)	27 7/8 (708)	20 (508)	4 3/4 (121)	8 1/2 (215)	5 (127)	7 3/4 (197)	3 1/2 (89)
12	240	12.0	3	1	**D12S3S**	**C2-236**	**C2-214**	55 (25)	27 7/8 (708)	20 (508)	4 3/4 (121)	8 1/2 (215)	5 (127)	7 3/4 (197)	3 1/2 (89)
12	480	12.0	1	1	**D12S11S**	**C/F**	**C/F**	55 (25)	27 7/8 (708)	20 (508)	4 3/4 (121)	8 1/2 (215)	5 (127)	7 3/4 (197)	3 1/2 (89)
12	480	12.0	3	1	**D12S5S**	**C2-43**	**C2-35**	55 (25)	27 7/8 (708)	20 (508)	4 3/4 (121)	8 1/2 (215)	5 (127)	7 3/4 (197)	3 1/2 (89)
18	240	18.0	1	2	**D18S10S**	**C/F**	**C/F**	65 (30)	27 7/8 (708)	20 (508)	6 3/4 (171)	10 1/2 (267)	7 (178)	9 3/4 (248)	3 (76)
18	240	18.0	3	1	**D18S3S**	**C2-236**	**C2-214**	65 (30)	27 7/8 (708)	20 (508)	6 3/4 (171)	10 1/2 (267)	7 (178)	9 3/4 (248)	3 (76)
18	480	18.0	1	1	**D18S11S**	**C/F**	**C/F**	65 (30)	27 7/8 (708)	20 (508)	6 3/4 (171)	10 1/2 (267)	7 (178)	9 3/4 (248)	3 (76)
18	480	18.0	3	1	**D18S5S**	**C2-43**	**C2-35**	65 (30)	27 7/8 (708)	20 (508)	6 3/4 (171)	10 1/2 (267)	7 (178)	9 3/4 (248)	3 (76)
24	240	24.0	1	2	**D24S10S**	**C/F**	**C/F**	95 (43)	27 7/8 (708)	20 (508)	8 3/4 (222)	12 1/2 (318)	9 (229)	11 3/4 (298)	2 3/4 (70)
24	240	24.0	3	2	**D24S3S**	**C2-218**	**C2-224**	95 (43)	27 7/8 (708)	20 (508)	8 3/4 (222)	12 1/2 (318)	9 (229)	11 3/4 (298)	2 3/4 (70)
24	480	24.0	1	1	**D24S11S**	**C/F**	**C/F**	95 (43)	27 7/8 (708)	20 (508)	8 3/4 (222)	12 1/2 (318)	9 (229)	11 3/4 (298)	2 3/4 (70)
24	480	24.0	3	1	**D24S5S**	**C2-225**	**C2-226**	95 (43)	27 7/8 (708)	20 (508)	8 3/4 (222)	12 1/2 (318)	9 (229)	11 3/4 (298)	2 3/4 (70)
30	240	30.0	3	2	**D30S3S**	**C2-218**	**C2-224**	120 (55)	27 7/8 (708)	20 (508)	10 3/4 (273)	14 1/2 (368)	11 (279)	13 3/4 (349)	3 1/4 (83)
30	480	30.0	1	2	**D30S11S**	**C/F**	**C/F**	120 (55)	27 7/8 (708)	20 (508)	10 3/4 (273)	14 1/2 (368)	11 (279)	13 3/4 (349)	3 1/4 (83)
30	480	30.0	3	1	**D30S5S**	**C2-225**	**C2-226**	120 (55)	27 7/8 (708)	20 (508)	10 3/4 (273)	14 1/2 (368)	11 (279)	13 3/4 (349)	3 1/4 (83)

CONTINUED

Notes:

- See *Watt Density vs. Air Temperature/Velocity* charts on page 379 to confirm suitability in the application.

C/F - Contact factory, go to www.watlow.com/en/contact-us

Duct Heaters

D SERIES

Application: High Temperature Air 800°F (427°C)

- Removable alloy 840 WATROD elements
- Without thermostat
- General purpose enclosure
- Steel flange

① 6 and 12 element heaters have (1) 1 inch NPT conduit opening; 18, 24, 30 and 42 element heaters have (2) 1 inch NPT conduit openings; 36, 48, 54, and 60 element heaters have (2) 1 inch NPT and (2) 1 1/4 inch conduit openings

② All flanges are 12 inches wide

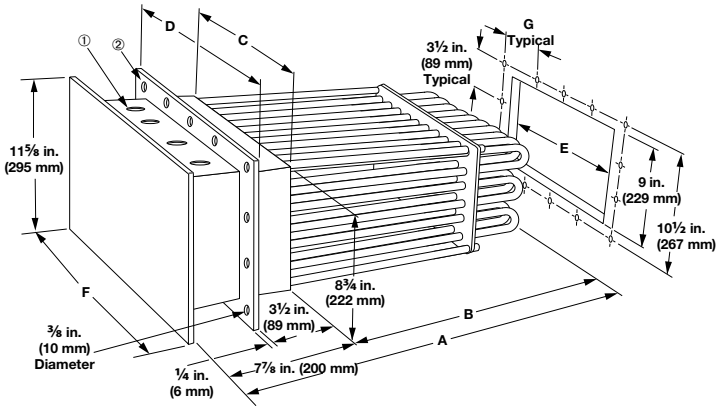

# of Elem.	Volts	kW	Ph	# Circ	Part Number	WATCONNECT P/N J T/C	WATCONNECT P/N K T/C	Ship Wt. lbs. (kg)	"A" Dim. in. (mm)	"B" Dim. in. (mm)	"C" Dim. in. (mm)	"D" Dim. in. (mm)	"E" Dim. in. (mm)	"F" Dim. in. (mm)	"G" Dim. in. (mm)
20 W/in² (3.1 W/cm²)															
36	240	36.0	3	2	**D36S3S**	**C2-218**	**C2-219**	135 (62)	27 7/8 (708.0)	20 (508)	12 3/4 (324)	16 1/2 (419)	13 (330)	15 3/4 (400)	3 3/4 (95)
36	480	36.0	1	2	**D36S11S**	**C/F**	**C/F**	135 (62)	27 7/8 (708.0)	20 (508)	12 3/4 (324)	16 1/2 (419)	13 (330)	15 3/4 (400)	3 3/4 (95)
36	480	36.0	3	1	**D36S5S**	**C2-225**	**C2-226**	135 (62)	27 7/8 (708.0)	20 (508)	12 3/4 (324)	16 1/2 (419)	13 (330)	15 3/4 (400)	3 3/4 (95)
42	240	42.0	3	2	**D42S3S**	**C/F**	**C/F**	155 (71)	27 7/8 (708.0)	20 (508)	14 3/4 (375)	18 1/2 (470)	15 (381)	17 3/4 (451)	4 1/4 (108)
42	480	42.0	1	2	**D42S11S**	**C/F**	**C/F**	155 (71)	27 7/8 (708.0)	20 (508)	14 3/4 (375)	18 1/2 (470)	15 (381)	17 3/4 (451)	4 1/4 (108)
42	480	42.0	3	2	**D42S5S**	**C2-229**	**C2-230**	155 (71)	27 7/8 (708.0)	20 (508)	14 3/4 (375)	18 1/2 (470)	15 (381)	17 3/4 (451)	4 1/4 (108)
48	240	48.0	3	4	**D48S3S**	**C4-148**	**C4-149**	195 (89)	27 7/8 (708.0)	20 (508)	16 3/4 (425)	20 1/2 (521)	17 (432)	19 3/4 (502)	4 3/4 (121)
48	480	48.0	1	2	**D48S11S**	**C/F**	**C/F**	195 (89)	27 7/8 (708.0)	20 (508)	16 3/4 (425)	20 1/2 (521)	17 (432)	19 3/4 (502)	4 3/4 (121)
48	480	48.0	3	2	**D48S5S**	**C2-229**	**C2-230**	195 (89)	27 7/8 (708.0)	20 (508)	16 3/4 (425)	20 1/2 (521)	17 (432)	19 3/4 (502)	4 3/4 (121)
54	240	54.0	3	3	**D54S3S**	**C4-144**	**C4-145**	205 (93)	27 7/8 (708.0)	20 (508)	18 3/4 (476)	22 1/2 (572)	19 (483)	21 3/4 (552)	5 1/4 (133)
54	480	54.0	1	3	**D54S11S**	**C/F**	**C/F**	205 (93)	27 7/8 (708.0)	20 (508)	18 3/4 (476)	22 1/2 (572)	19 (483)	21 3/4 (552)	5 1/4 (133)
54	480	54.0	3	2	**D54S5S**	**C2-229**	**C2-230**	205 (93)	27 7/8 (708.0)	20 (508)	18 3/4 (476)	22 1/2 (572)	19 (483)	21 3/4 (552)	5 1/4 (133)
60	240	60.0	3	4	**D60S3S**	**C4-148**	**C4-149**	235 (107)	27 7/8 (708.0)	20 (508)	20 3/4 (527)	24 1/2 (622)	21 (533)	23 3/4 (603)	5 3/4 (146)
60	480	60.0	1	4	**D60S11S**	**C/F**	**C/F**	235 (107)	27 7/8 (708.0)	20 (508)	20 3/4 (527)	24 1/2 (622)	21 (533)	23 3/4 (603)	5 3/4 (146)
60	480	60.0	3	2	**D60S5S**	**C2-229**	**C2-230**	235 (107)	27 7/8 (708.0)	20 (508)	20 3/4 (527)	24 1/2 (622)	21 (533)	23 3/4 (603)	5 3/4 (146)
60	240	75.0	3	4	**D75S3S**	**C4-148**	**C4-149**	260 (118)	32 7/8 (835.0)	25 (635)	20 3/4 (527)	24 1/2 (622)	21 (533)	23 3/4 (603)	5 3/4 (146)
60	480	75.0	1	4	**D75S11S**	**C/F**	**C/F**	260 (118)	32 7/8 (835.0)	25 (635)	20 3/4 (527)	24 1/2 (622)	21 (533)	23 3/4 (603)	5 3/4 (146)
60	480	75.0	3	2	**D75S5S**	**C2-229**	**C2-230**	260 (118)	32 7/8 (835.0)	25 (635)	20 3/4 (527)	24 1/2 (622)	21 (533)	23 3/4 (603)	5 3/4 (146)
60	480	100.0	3	4	**D100S5S**	**C4-156**	**C4-157**	290 (132)	40 3/8 (1025.5)	32 1/2 (826)	20 3/4 (527)	24 1/2 (622)	21 (533)	23 3/4 (603)	5 3/4 (146)
60	480	125.0	3	4	**D125S5S**	**C4-156**	**C4-157**	310 (141)	49 3/8 (1254.1)	41 1/2 (1054)	20 3/4 (527)	24 1/2 (622)	21 (533)	23 3/4 (603)	5 3/4 (146)

Notes:

- See *Watt Density vs. Air Temperature/Velocity* charts on page 379 to confirm suitability in the application.

C/F - Contact factory, go to www.watlow.com/en/contact-us

Duct Heaters

D SERIES

Application: Medium Temperature Air 750°F (399°C)

- Removable alloy 840 WATROD elements
- Without thermostat
- General purpose enclosure
- Steel flange

① 6 and 12 element heaters have (1) 1 inch NPT conduit opening; 18, 24, 30 and 42 element heaters have (2) 1 inch NPT conduit openings; 36, 48, 54, and 60 element heaters have (2) 1 inch NPT and (2) 1 1/4 inch conduit openings

② All flanges are 12 inches wide

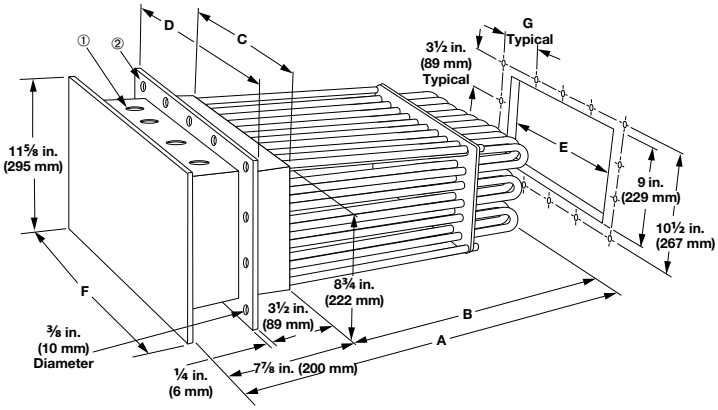

# of Elem.	Volts	kW	Ph	# Circ	Part Number	WATCONNECT P/N J T/C	WATCONNECT P/N K T/C	Ship Wt. lbs. (kg)	"A" Dim. in. (mm)	"B" Dim. in. (mm)	"C" Dim. in. (mm)	"D" Dim. in. (mm)	"E" Dim. in. (mm)	"F" Dim. in. (mm)	"G" Dim. in. (mm)
30 W/in² (4.7 W/cm²)															
6	240	9.0	1	1	**D6SX10S**	**C/F**	**C/F**	50 (23)	27 7/8 (708)	20 (508)	2 3/4 (70)	6 1/2 (165)	3 (76)	5 3/4 (146)	2 1/2 (64)
6	240	9.0	3	1	**D6SX3S**	**C2-50**	**C2-92**	50 (23)	27 7/8 (708)	20 (508)	2 3/4 (70)	6 1/2 (165)	3 (76)	5 3/4 (146)	2 1/2 (64)
6	480	9.0	1	1	**D6SX11S**	**C/F**	**C/F**	50 (23)	27 7/8 (708)	20 (508)	2 3/4 (70)	6 1/2 (165)	3 (76)	5 3/4 (146)	2 1/2 (64)
6	480	9.0	3	1	**D6SX5S**	**C2-43**	**C2-35**	50 (23)	27 7/8 (708)	20 (508)	2 3/4 (70)	6 1/2 (165)	3 (76)	5 3/4 (146)	2 1/2 (64)
12	240	18.0	1	2	**D12SX10S**	**C/F**	**C/F**	55 (25)	27 7/8 (708)	20 (508)	4 3/4 (121)	8 1/2 (215)	5 (127)	7 3/4 (197)	3 1/2 (89)
12	240	18.0	3	1	**D12SX3S**	**C2-236**	**C2-214**	55 (25)	27 7/8 (708)	20 (508)	4 3/4 (121)	8 1/2 (215)	5 (127)	7 3/4 (197)	3 1/2 (89)
12	480	18.0	1	1	**D12SX11S**	**C/F**	**C/F**	55 (25)	27 7/8 (708)	20 (508)	4 3/4 (121)	8 1/2 (215)	5 (127)	7 3/4 (197)	3 1/2 (89)
12	480	18.0	3	1	**D12SX5S**	**C2-43**	**C2-35**	55 (25)	27 7/8 (708)	20 (508)	4 3/4 (121)	8 1/2 (215)	5 (127)	7 3/4 (197)	3 1/2 (89)
18	240	27.0	1	3	**D18SX10S**	**C/F**	**C/F**	65 (30)	27 7/8 (708)	20 (508)	6 3/4 (171)	10 1/2 (267)	7 (178)	9 3/4 (248)	3 (76)
18	240	27.0	3	2	**D18SX3S**	**C2-218**	**C2-224**	65 (30)	27 7/8 (708)	20 (508)	6 3/4 (171)	10 1/2 (267)	7 (178)	9 3/4 (248)	3 (76)
18	480	27.0	1	2	**D18SX11S**	**C/F**	**C/F**	65 (30)	27 7/8 (708)	20 (508)	6 3/4 (171)	10 1/2 (267)	7 (178)	9 3/4 (248)	3 (76)
18	480	27.0	3	1	**D18SX5S**	**C2-225**	**C2-226**	65 (30)	27 7/8 (708)	20 (508)	6 3/4 (171)	10 1/2 (267)	7 (178)	9 3/4 (248)	3 (76)
24	240	36.0	1	4	**D24SX10S**	**C/F**	**C/F**	95 (43)	27 7/8 (708)	20 (508)	8 3/4 (222)	12 1/2 (318)	9 (229)	11 3/4 (298)	2 3/4 (70)
24	240	36.0	3	2	**D24SX3S**	**C2-218**	**C2-219**	95 (43)	27 7/8 (708)	20 (508)	8 3/4 (222)	12 1/2 (318)	9 (229)	11 3/4 (298)	2 3/4 (70)
24	480	36.0	1	2	**D24SX11S**	**C/F**	**C/F**	95 (43)	27 7/8 (708)	20 (508)	8 3/4 (222)	12 1/2 (318)	9 (229)	11 3/4 (298)	2 3/4 (70)
24	480	36.0	3	1	**D24SX5S**	**C2-225**	**C2-226**	95 (43)	27 7/8 (708)	20 (508)	8 3/4 (222)	12 1/2 (318)	9 (229)	11 3/4 (298)	2 3/4 (70)
30	240	45.0	3	5	**D30SX3S**	**C4-144**	**C4-145**	120 (55)	27 7/8 (708)	20 (508)	10 3/4 (273)	14 1/2 (368)	11 (279)	13 3/4 (349)	3 1/4 (83)
30	480	45.0	1	2	**D30SX11S**	**C/F**	**C/F**	120 (55)	27 7/8 (708)	20 (508)	10 3/4 (273)	14 1/2 (368)	11 (279)	13 3/4 (349)	3 1/4 (83)
30	480	45.0	3	2	**D30SX5S**	**C2-229**	**C2-230**	120 (55)	27 7/8 (708)	20 (508)	10 3/4 (273)	14 1/2 (368)	11 (279)	13 3/4 (349)	3 1/4 (83)

CONTINUED

Notes:

- See *Watt Density vs. Air Temperature/Velocity* charts on page 379 to confirm suitability in the application.

C/F - Contact factory, go to www.watlow.com/en/contact-us

Duct Heaters

D SERIES

Application: Medium Temperature Air 750°F (399°C)

- Removable alloy 840 WATROD elements
- Without thermostat
- General purpose enclosure
- Steel flange

① 6 and 12 element heaters have (1) 1 inch NPT conduit opening; 18, 24, 30 and 42 element heaters have (2) 1 inch NPT conduit openings; 36, 48, 54, and 60 element heaters have (2) 1 inch NPT and (2) 1 1/4 inch conduit openings

② All flanges are 12 inches wide

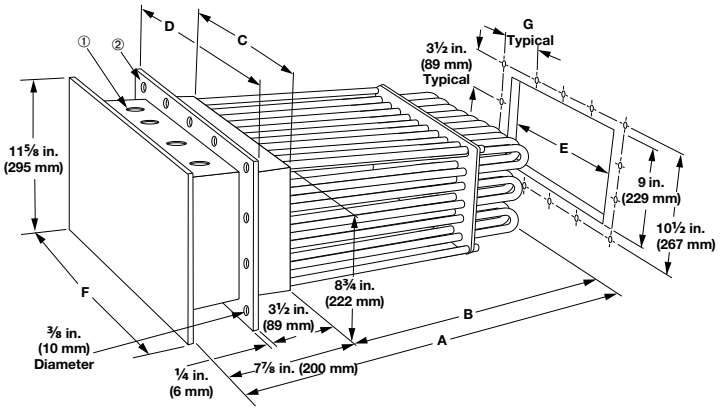

# of Elem.	Volts	kW	Ph	# Circ	Part Number	WATCONNECT P/N J T/C	WATCONNECT P/N K T/C	Ship Wt. lbs. (kg)	"A" Dim. in. (mm)	"B" Dim. in. (mm)	"C" Dim. in. (mm)	"D" Dim. in. (mm)	"E" Dim. in. (mm)	"F" Dim. in. (mm)	"G" Dim. in. (mm)
30 W/in² (4.7 W/cm²)															
36	240	54.0	3	3	**D36SX3S**	**C4-144**	**C4-145**	135 (62)	27 7/8 (708.0)	20 (508)	12 3/4 (324)	16 1/2 (419)	13 (330)	15 3/4 (400)	3 3/4 (95)
36	480	54.0	1	3	**D36SX11S**	**C/F**	**C/F**	135 (62)	27 7/8 (708.0)	20 (508)	12 3/4 (324)	16 1/2 (419)	13 (330)	15 3/4 (400)	3 3/4 (95)
36	480	54.0	3	2	**D36SX5S**	**C2-229**	**C2-230**	135 (62)	27 7/8 (708.0)	20 (508)	12 3/4 (324)	16 1/2 (419)	13 (330)	15 3/4 (400)	3 3/4 (95)
42	240	63.0	3	7	**D42SX3S**	**C4-148**	**C4-149**	155 (71)	27 7/8 (708.0)	20 (508)	14 3/4 (375)	18 1/2 (470)	15 (381)	17 3/4 (451)	4 1/4(108)
42	480	63.0	1	3	**D42SX11S**	**C/F**	**C/F**	155 (71)	27 7/8 (708.0)	20 (508)	14 3/4 (375)	18 1/2 (470)	15 (381)	17 3/4 (451)	4 1/4(108)
42	480	63.0	3	2	**D42SX5S**	**C2-229**	**C2-230**	155 (71)	27 7/8 (708.0)	20 (508)	14 3/4 (375)	18 1/2 (470)	15 (381)	17 3/4 (451)	4 1/4(108)
48	240	72.0	3	4	**D48SX3S**	**C4-148**	**C4-149**	195 (89)	27 7/8 (708.0)	20 (508)	16 3/4 (425)	20 1/2 (521)	17 (432)	19 3/4 (502)	4 3/4(121)
48	480	72.0	1	4	**D48SX11S**	**C/F**	**C/F**	195 (89)	27 7/8 (708.0)	20 (508)	16 3/4 (425)	20 1/2 (521)	17 (432)	19 3/4 (502)	4 3/4(121)
48	480	72.0	3	2	**D48SX5S**	**C2-229**	**C2-230**	195 (89)	27 7/8 (708.0)	20 (508)	16 3/4 (425)	20 1/2 (521)	17 (432)	19 3/4 (502)	4 3/4(121)
54	240	81.0	3	6	**D54SX3S**	**C/F**	**C/F**	205 (93)	27 7/8 (708.0)	20 (508)	18 3/4 (476)	22 1/2 (572)	19 (483)	21 3/4 (552)	5 1/4(133)
54	480	81.0	1	6	**D54SX11S**	**C/F**	**C/F**	205 (93)	27 7/8 (708.0)	20 (508)	18 3/4 (476)	22 1/2 (572)	19 (483)	21 3/4 (552)	5 1/4(133)
54	480	81.0	3	3	**D54SX5S**	**C4-152**	**C4-153**	205 (93)	27 7/8 (708.0)	20 (508)	18 3/4 (476)	22 1/2 (572)	19 (483)	21 3/4 (552)	5 1/4(133)
60	240	90.0	3	5	**D60SX3S**	**C/F**	**C/F**	235 (107)	27 7/8 (708.0)	20 (508)	20 3/4 (527)	24 1/2 (622)	21 (533)	23 3/4 (603)	5 3/4(146)
60	480	90.0	1	4	**D60SX11S**	**C/F**	**C/F**	235 (107)	27 7/8 (708.0)	20 (508)	20 3/4 (527)	24 1/2 (622)	21 (533)	23 3/4 (603)	5 3/4(146)
60	480	90.0	3	4	**D60SX5S**	**C4-156**	**C4-157**	235 (107)	27 7/8 (708.0)	20 (508)	20 3/4 (527)	24 1/2 (622)	21 (533)	23 3/4 (603)	5 3/4(146)
60	240	115.0	3	10	**D75SX3S**	**C/F**	**C/F**	260 (118)	32 7/8 (835.0)	25 (635)	20 3/4 (527)	24 1/2 (622)	21 (533)	23 3/4 (603)	5 3/4(146)
60	480	115.0	1	5	**D75SX11S**	**C/F**	**C/F**	260 (118)	32 7/8 (835.0)	25 (635)	20 3/4 (527)	24 1/2 (622)	21 (533)	23 3/4 (603)	5 3/4(146)
60	480	115.0	3	4	**D75SX5S**	**C4-156**	**C4-157**	260 (118)	32 7/8 (835.0)	25 (635)	20 3/4 (527)	24 1/2 (622)	21 (533)	23 3/4 (603)	5 3/4(146)
60	480	150.0	3	4	**D100SX5S**	**C4-156**	**C4-157**	290 (132)	40 3/8 (1025.5)	32 1/2 (826)	20 3/4 (527)	24 1/2 (622)	21 (533)	23 3/4 (603)	5 3/4(146)
60	480	190.0	3	5	**D125SX5S**	**C/F**	**C/F**	310 (141)	49 3/8 (1254.1)	41 1/2 (1054)	20 3/4 (527)	24 1/2 (622)	21 (533)	23 3/4 (603)	5 3/4(146)

Notes:

- See *Watt Density vs. Air Temperature/Velocity* charts on page 379 to confirm suitability in the application.

C/F - Contact factory, go to www.watlow.com/en/contact-us

Duct Heaters

LDH SERIES and D SERIES

Replacement Elements

Replaceable heating elements provide easy field service and reduce downtime. Element change-out is made simple by a single screw clamp.

To order replacement elements, specify the **replacement element part number** (from the table) that corresponds to the original Watlow duct heater part number. Then, specify **quantity.**

Replacement Elements

Original Duct Heater Part Numbers	Replacement Element Volts	Watts	A Dimension in.	(mm)	Replacement Element Part Number	Est. Net Wt. lbs	(kg)
20 W/in² (3.1 W/cm²)							
D6S3 to D60S3	240	1000	27 7/8	(708.0)	**D6240**	1.0	(0.5)
D6S5 to D60S5	480	1000	27 7/8	(708.0)	**D6480**	1.0	(0.5)
D75S3	240	1250	32 7/8	(835.0)	**D75240**	1.0	(0.5)
D75S5	480	1250	32 7/8	(835.0)	**D75480**	1.0	(0.5)
D100S5	480	1667	40 3/8	(1025.5)	**D100480**	1.4	(0.7)
D125S5	480	2083	49 3/8	(1254.1)	**D125480**	1.7	(0.8)
30 W/in² (4.7 W/cm²)							
D6SX3 to D60SX3	240	1500	27 7/8	(708.0)	**D6X240**	1.0	(0.5)
D6SX5 to D60SX5	480	1500	27 7/8	(708.0)	**D6X480**	1.0	(0.5)
D75SX3	240	1917	32 7/8	(835.0)	**D75X240**	1.0	(0.5)
D75SX5	480	1917	32 7/8	(835.0)	**D75X480**	1.0	(0.5)
D100SX5	480	2500	40 3/8	(1025.5)	**D100X480**	1.4	(0.7)
D125SX5	480	3167	49 3/8	(1254.1)	**D125X480**	1.7	(0.8)

Duct Heaters

LDH SERIES and D SERIES

Part Number

Stock Duct Part Number	Optional Terminal Enclosures	Optional Process Sensors	Sheath Limit Sensors

Stock Duct Part Number
Note: Catalog part numbers include optional enclosures. To order optional enclosures or sensors, substitute the appropriate suffix.

Optional Terminal Enclosures	
S =	General purpose enclosure
W=	Moisture resistant enclosure
Note: Catalog listing is a general purpose enclosure. Substitute enclosure options are noted.	

Optional Bulb & Capillary Thermostats or Thermocouple Process Sensors	
PJ =	Type J process thermocouple in thermowell
PK=	Type K process thermocouple in thermowell

Sheath Limit Sensors	
HJ=	Type J high-limit thermocouple
HK=	Type K high-limit thermocouple

Example Part Number: D6SX10 S J HJ

Duct Heaters

MDH SERIES

Watlow's line of process air heaters offer improved performance and increased versatility in medium to low temperature applications.

The duct heaters are modular and consist of two parts. The first is a six kilowatt heater available in either 240 or 480 volts, single- or three-phase.

The second part of the heater consists of the electrical terminal enclosure protecting each module's termination area and a main flange that bolts into the user's ductwork. The heater modules are installed in the housing and main flange via rectangular slots in the main flange. The range of modules that can be accommodated in various duct heater assemblies range from one to 10 modules. A range of six to 60 kilowatts, in six kilowatt increments is achieved.

The new design of the modular duct heater offers increased reliability. The individual modules are removable through the terminal enclosure of the assembly, which eliminates the need to pull the complete heater from the ductwork. This reduces downtime and costs because the heating elements can be replaced individually.

Performance improvements include quicker response time and reduced infiltration from the air stream being heated into the electrical enclosure.

Features and Benefits

Individual modules removable through housing
- Reduces downtime for replacement of module

Smaller diameter elements (0.315 inch)
- Results in a 25 percent lower energy usage on initial heat-up

27 percent reduction in heat-up time as compared to traditional 0.430 inch diameter duct heater elements
- Results in faster response time

31 percent lighter weight than traditional tubular duct heaters
- Reduces shipping costs and increases worker safety

Greater free cross sectional area
- Results in lower pressure drop

Improved seal between element and electrical terminal enclosure
- Results in lower electrical terminal enclosure temperature

Flexible module wiring
- Allows user to sequentially stage modules

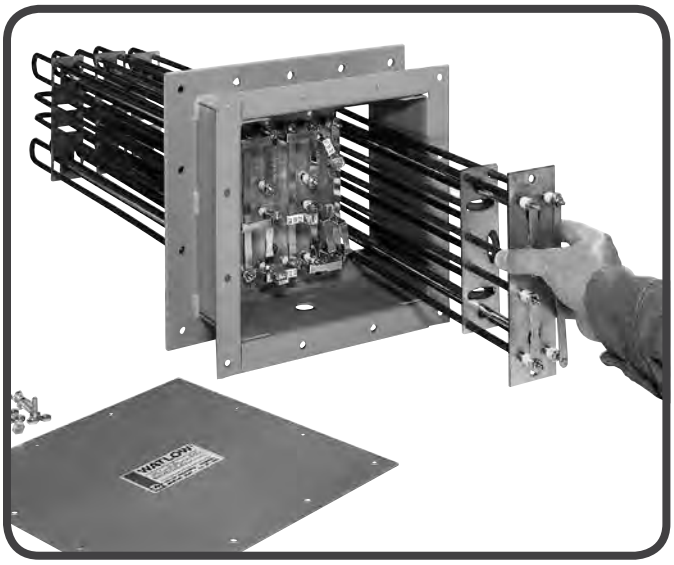

Typical Applications

- Low temperature ovens
- Parts drying
- Semiconductor cleanroom environmental heating
- Plastic curing
- Load banks
- Heated air knives
- Food dehydration
- Heat shrink tunnels

Duct Heaters

MDH SERIES

Velocity vs. Process Temperature

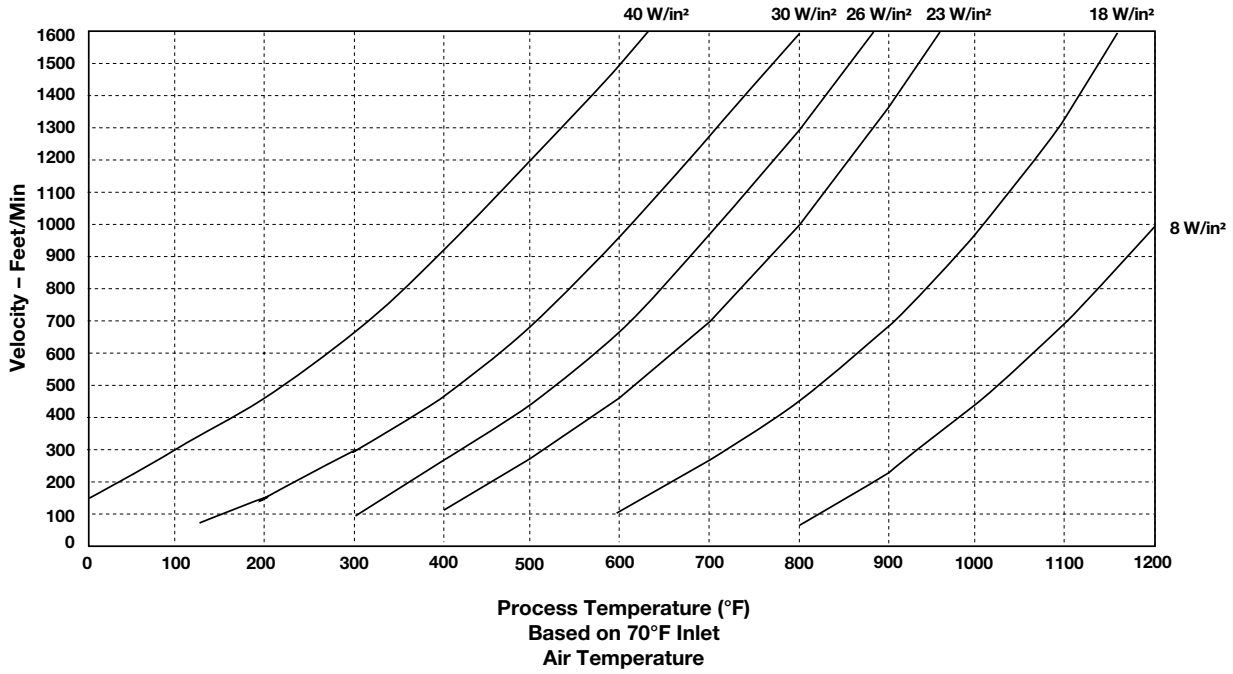

Watt Density vs. Sheath Temperature

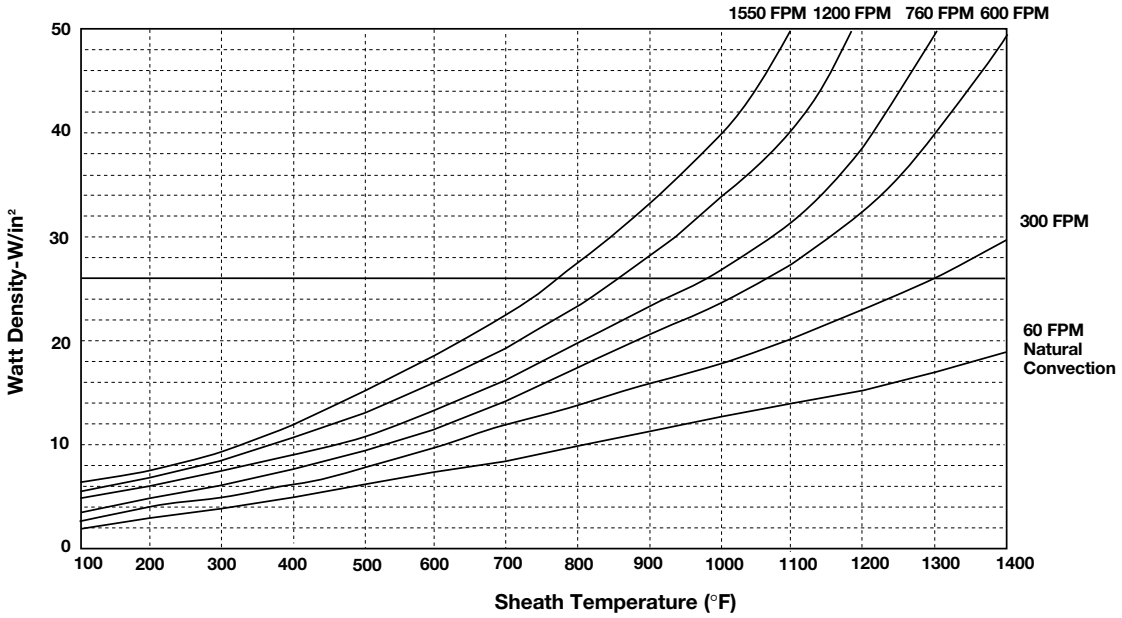

Duct Heaters

MDH SERIES

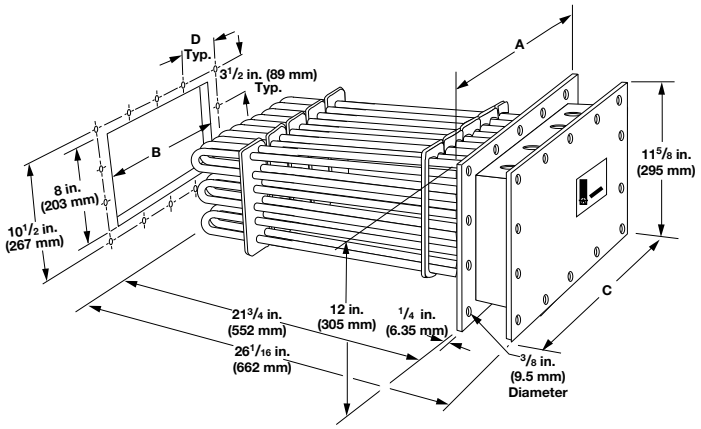

Application: Air Heating – Maximum Outlet Temperature – 750°F (399°C)

								WATCONNECT P/N		Dimensions in.			
Watt Density W/in²	kW	Volts	Phase	No. of Circuits	No. of Modules	Est. Shipping Wt. lbs	Part Number	J T/C	K T/C	A	B	C	D
26	6	240	1	1	1	35	**MDH6SI0**	**C/F**	**C/F**	6.50	2.50	5.75	2.50
26	6	240	3	1	1	35	**MDH6S3**	**C2-50**	**C2-92**	6.50	2.50	5.75	2.50
26	6	480	1	1	1	35	**MDH6S11**	**C/F**	**C/F**	6.50	2.50	5.75	2.50
26	6	480	3	1	1	35	**MDH6S5**	**C2-43**	**C2-35**	6.50	2.50	5.75	2.50
26	12	240	1	2	2	39	**MDH12SI0**	**C/F**	**C/F**	8.50	4.75	7.75	3.50
26	12	240	3	1	2	39	**MDH12S3**	**C2-236**	**C2-214**	8.50	4.75	7.75	3.50
26	12	480	1	1	2	39	**MDH12S11**	**C/F**	**C/F**	8.50	4.75	7.75	3.50
26	12	480	3	1	2	39	**MDH12S5**	**C2-43**	**C2-35**	8.50	4.75	7.75	3.50
26	18	240	1	3	3	46	**MDH18SI0**	**C/F**	**C/F**	10.50	7.00	9.75	3.00
26	18	240	3	1	3	46	**MDH18S3**	**C2-236**	**C2-214**	10.50	7.00	9.75	3.00
26	18	480	1	1	3	46	**MDH18S11**	**C/F**	**C/F**	10.50	7.00	9.75	3.00
26	18	480	3	1	3	46	**MDH18S5**	**C2-43**	**C2-35**	10.50	7.00	9.75	3.00
26	24	240	1	4	4	67	**MDH24S10**	**C/F**	**C/F**	12.50	9.25	11.75	2.75
26	24	240	3	2	4	67	**MDH24S3**	**C2-218**	**C2-224**	12.50	9.25	11.75	2.75
26	24	480	1	2	4	67	**MDH24S11**	**C/F**	**C/F**	12.50	9.25	11.75	2.75
26	24	480	3	1	4	67	**MDH24S5**	**C2-225**	**C2-226**	12.50	9.25	11.75	2.75
26	30	240	3	2	5	84	**MDH30S3**	**C2-218**	**C2-224**	15.75	11.50	15.00	3.56
26	30	480	1	2	5	84	**MDH30S11**	**C/F**	**C/F**	15.75	11.50	15.00	3.56
26	30	480	3	1	5	84	**MDH30S5**	**C2-225**	**C2-226**	15.75	11.50	15.00	3.56
26	36	240	3	2	6	95	**MDH36S3**	**C2-218**	**C2-224**	18.00	13.75	17.25	4.13
26	36	480	1	2	6	95	**MDH36S11**	**C/F**	**C/F**	18.00	13.75	17.25	4.13
26	36	480	3	1	6	95	**MDH36S5**	**C2-225**	**C2-226**	18.00	13.75	17.25	4.13
26	42	240	3	3	7	109	**MDH42S3**	**C4-144**	**C4-145**	20.25	16.00	19.50	4.69
26	42	480	1	3	7	109	**MDH42S11**	**C/F**	**C/F**	20.25	16.00	19.50	4.69
26	42	480	3	2	7	109	**MDH42S5**	**C2-229**	**C2-230**	20.25	16.00	19.50	4.69
26	48	240	3	4	8	137	**MDH48S3**	**C4-148**	**C4-149**	22.50	18.25	21.75	5.25
26	48	480	1	3	8	137	**MDH48S11**	**C/F**	**C/F**	22.50	18.25	21.75	5.25
26	48	480	3	2	8	137	**MDH48S5**	**C2-229**	**C2-230**	22.50	18.25	21.75	5.25
26	54	240	3	3	9	144	**MDH54S3**	**C4-144**	**C4-145**	24.75	20.50	24.00	5.81
26	54	480	1	3	9	144	**MDH54S11**	**C/F**	**C/F**	24.75	20.50	24.00	5.81
26	54	480	3	2	9	144	**MDH54S5**	**C2-229**	**C2-230**	24.75	20.50	24.00	5.81
26	60	240	3	4	10	165	**MDH60S3**	**C4-148**	**C4-149**	27.00	22.75	26.25	6.38
26	60	480	1	4	10	165	**MDH6OS11**	**C/F**	**C/F**	27.00	22.75	26.25	6.38
26	60	480	3	2	10	165	**MDH60S5**	**C2-229**	**C2-230**	27.00	22.75	26.25	6.38

Options include individual modules with optional general purpose terminal enclosure, high-temperature thermocouple kit and blank flange modules.
C/F - Contact factory, go to www.watlow.com/en/contact-us

Modular duct heaters with **1** and **2** modules have conduit openings for **one,** 1 inch NPT fitting.

Modular duct heaters with **3, 4, 5,** and **7** modules have conduit openings for **two,** 1 inch NPT fittings.

Modular duct heaters with **6, 8, 9,** and **10** modules have conduit openings for **two,** 1 1/4 inch NPT and **two,** 1 inch NPT fittings.

Duct Heaters

MDH SERIES

Individual Module Dimensions

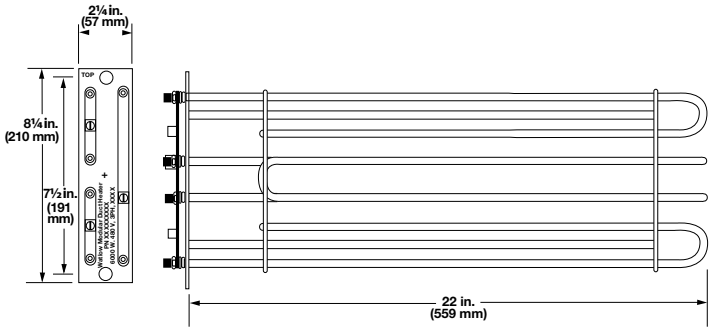

Specifications

- Module rating - 240 or 480VAC, 6kW, three-phase or one-phase
- Watt density - 26 W/in^2
- Elements - 0.315 inch dia. alloy 840 elements
- High-limit thermocouple installed by drilling premarked hole in flange
- 6-60kW range when mounted in duct heater assembly

Application Information

- Maximum sheath temperature = 1200°F (649°C)
- Maximum outlet temperature = 750°F (399°C)

Options

Terminal Enclosures

Terminal enclosures are available in general purpose and moisture resistant configurations.

High-Limit Thermocouples

High-limit thermocouples can be supplied on specified modules or shipped as a kit. Available thermocouples are Types J and K.

Blank Module Covers

Module covers are available for covering blank slots on the main flange. This allows for adding heater modules at a later time to allow higher wattage outputs.

Replacement Modules

Replacement modules provide easy field service and reduce downtime. To order replacement modules specify the **replacement module** part number (from the table), then specify the **quantity**.

Watlow Part Number	Description
Replacement Modules	
M63	6kW, 240V, 3 phase
M610	6kW, 240V, 1 phase
M65	6kW, 480V, 3 phase
M611	6kW, 480V, 1 phase
High Limit Thermocouple Kits	
MTCJ	Type J (0-1000°F)
MTCK	Type K (0-2000°F)
Blank Module Covers	
MBLK	Cover slots in main flange

Finned Heaters

375 Finned Strip Heaters

Watlow's 375 finned strip heater is constructed of highly-compacted magnesium oxide (MgO) based insulation, which conducts heat efficiently from the nickel chromium element wire to the sheath. Two-inch wide (51 mm) nickel plated fins are attached to maximize surface contact allowing heat to transfer into the air faster. Lower sheath temperature and element life are maximized by this finned construction.

Performance Capabilities

- Aluminized steel sheath temperatures up to 1100°F (595°C)
- Watt density up to 33 W/in^2 (5.1 W/cm^2)
- UL® approved up to 240VAC (File No. E52951)
- CSA approved up to 480VAC (File No. LR7392)

Features and Benefits

Nickel chromium element wire is centered in the heater
- Ensures temperature uniformity

Aluminized steel sheath
- Operates at higher temperatures
- Resists corrosion more effectively than iron-sheathed heaters

Optional 430 stainless steel sheath
- Provides a durable solution for highly-corrosive environments

Welded post terminals
- Produces strong, trouble-free connections

Available lengths from 5^1/2 to 48 in. (140 to 1220 mm)
- Fits a variety of application needs

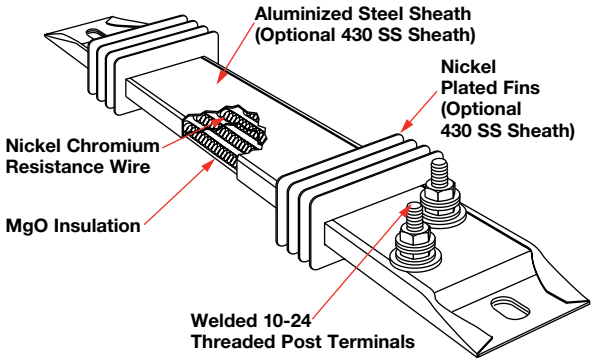

Typical Applications

- Enclosure heating
- Load bank resistors
- Shrink tunnels
- Duct heaters
- Space heaters
- Drying ovens
- Incubators
- Air heating
- Heat curing
- Ink drying
- Food warmers
- Moisture protection
- Dehumidifiers
- Stress relieving ovens

Finned Heaters

375 Finned Strip Heaters

Applications and Technical Data

Calculating Watt Density

Use the graph and formulas to ensure that the maximum allowable watt density for the heater is not exceeded in the application.

Open air watt density is calculated for the total heated surface area.

Formulas

$$\text{Watt Density} = \frac{\text{Wattage}}{\text{Heated Area}}$$

Heated Area
(Offset Terminals) = [Overall Length (A) - 4 in.] x 3.75 in.
= [Overall Length (A) - 102 mm] x 95.3 mm

Heated Area
(Parallel Terminals) = [Overall Length (A) - 3.12 in.] x 3.75 in.
= [Overall Length (A) - 79.3 mm] x 95.3 mm

Heated Area
(One-on-One Terminals) = [Overall Length (A) - 4.25 in.] x 3.75 in.
= [Overall Length (A) - 108 mm] x 95.3 mm

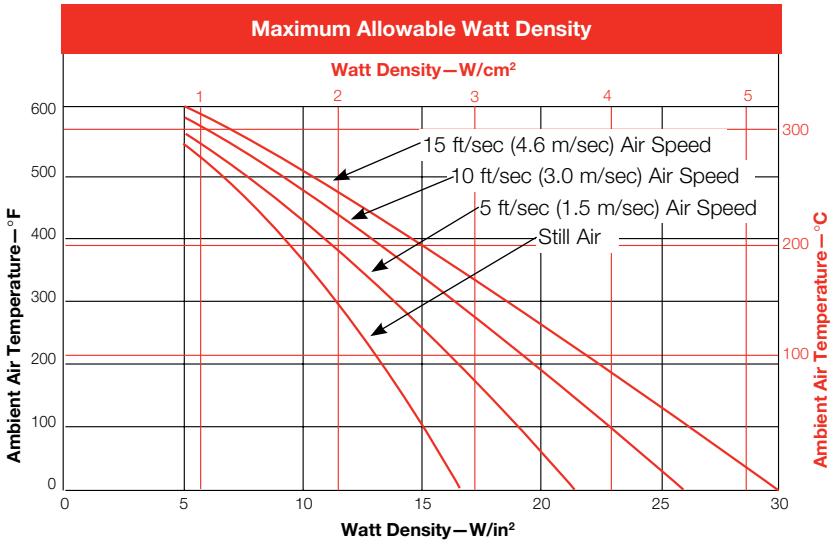

Finned Heaters

375 Finned Strip Heaters

Termination Options

Offset Terminals

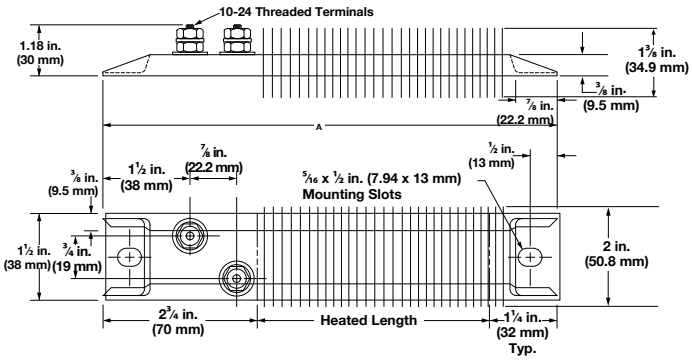

Two 10-24 threaded post terminals are offset from each other on the same end.

One-on-One Terminals

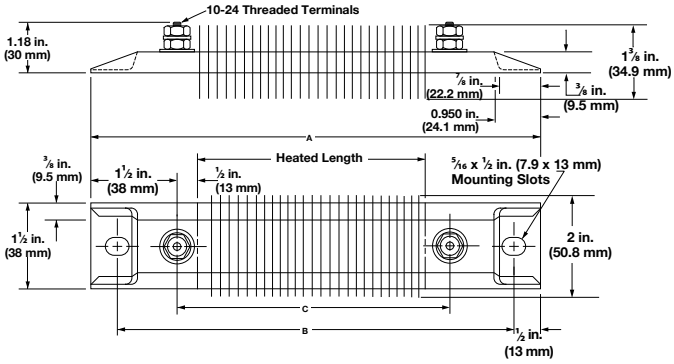

Two 10-24 threaded post terminals are placed one on each end.

Parallel Terminals

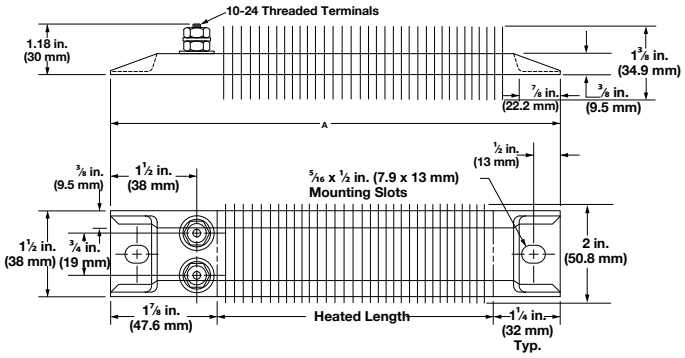

Two 10-24 threaded post terminals are used; both terminals on one end.

In-Line Terminals

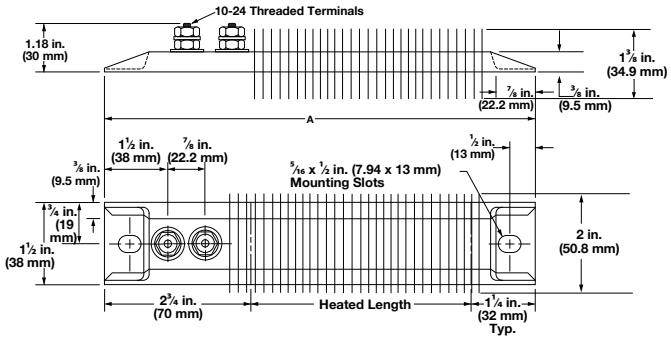

Two 10-24 threaded post terminals are in-line with each other on the same end.

Finned Heaters

375 Finned Strip Heaters

Termination Options *(Continued)*

Metallic Terminal Boxes - Variations

Metallic terminal boxes are available from stock on offset terminals. Terminal boxes act as a safety feature by covering the terminals. A conduit may be attached to the box through 7/8 in. (22.2 mm) diameter holes in the ends of the box. To order, specify **terminal box**.

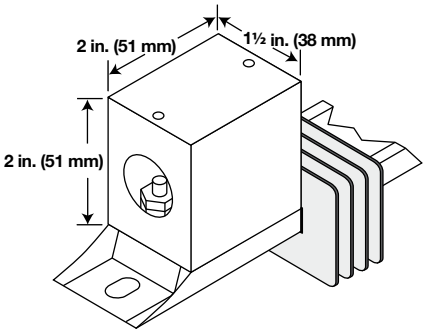

Available on in-line terminals only.

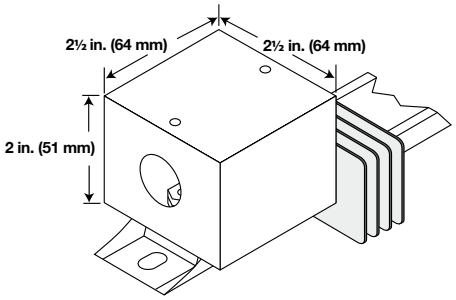

Available on offset terminals from stock and manufactured.

Accessories

Secondary Insulation Bushings

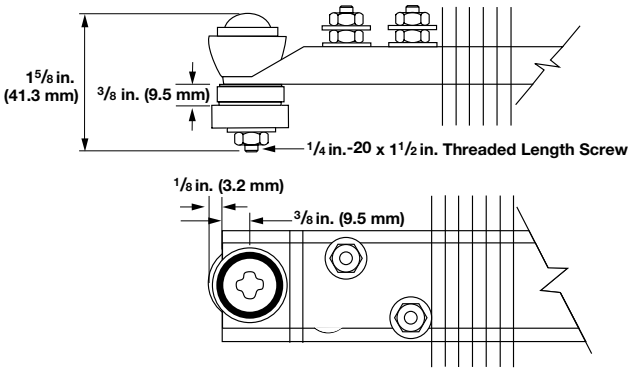

Insulators are suitable when air heating and/or voltage to ground is a concern. A secondary insulation bushing kit, part number **Z-5230,** contains one set of bushings for one heater. To accommodate bushings, 17/32 x 11/16 inch diameter mounting holes **must** be specified when ordering.

Ceramic Terminal Covers

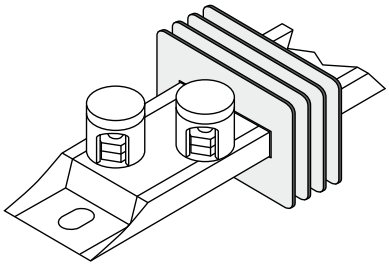

Ceramic terminal covers offer a convenient and economical method to insulate post terminals. A 10-24 screw thread is sized for standard length posts and is supplied as an accessory item and shipped separately. Specify **Z-4918** and quantity.

Note: Number of fins are dependent on length of heater.

Finned Heaters

375 Finned Strip Heaters

Heater Part Numbers

Width in. (mm)	Termination	Length in. (mm)	Volts	Power (Watts)	W/in² (W/cm²)	Approx. Net Wt. lbs (kg)	Part Number
1 1/2 (38)	Parallel	5 1/2 (140)	120	125	14 (2.1)	0.5 (0.23)	**SGA1J5JY2**
	Parallel	5 1/2 (140)	120	250	28 (4.3)	0.5 (0.23)	**SGA1J5JY3**
	Parallel	6 (152)	120	150	14 (2.1)	0.5 (0.23)	**SGA1J6AY1**
	Parallel	6 (152)	240	150	14 (2.1)	0.5 (0.23)	**SGA1J6AY2**
	Parallel	6 (152)	120	300	28 (4.3)	0.5 (0.23)	**SGA1J6AY3**
	Parallel	6 (152)	240	300	28 (4.3)	0.5 (0.23)	**SGA1J6AY4**
	Offset	7 1/2 (191)	120	150	12 (1.8)	0.7 (0.32)	**SGA1J7JW1**
	Offset	7 1/2 (191)	240	150	12 (1.8)	0.7 (0.32)	**SGA1J7JW2**
	Offset	7 1/2 (191)	240	200	15 (2.3)	0.7 (0.32)	**SGA1J7JW3**
	Offset	8 (203)	120	150	10 (1.5)	0.7 (0.32)	**SGA1J8AW2**
	Offset	8 (203)	240	150	10 (1.5)	0.7 (0.32)	**SGA1J8AW3**
	Offset	8 (203)	120	175	12 (1.8)	0.7 (0.32)	**SGA1J8AW4**
	Offset	8 (203)	240	175	12 (1.8)	0.7 (0.32)	**SGA1J8AW5**
	Offset	8 (203)	120	250	17 (2.6)	0.7 (0.32)	**SGA1J8AW6**
	Offset	8 (203)	240	250	17 (2.6)	0.7 (0.32)	**SGA1J8AW7**
	Offset	8 (203)	120	400	27 (4.2)	0.7 (0.32)	**SGA1J8AW8**
	Offset	8 (203)	240	400	27 (4.2)	0.7 (0.32)	**SGA1J8AW9**
	Offset	8 (203)	120	500	33 (5.1)	0.7 (0.32)	**SGA1J8AW10**
	Offset	8 (203)	240	500	33 (5.1)	0.7 (0.32)	**SGA1J8AW11**
	Offset	10 1/2 (267)	120	250	10 (1.5)	0.9 (0.40)	**SGA1J10JW1**
	Offset	10 1/2 (267)	240	250	10 (1.5)	0.9 (0.40)	**SGA1J10JW2**
	Offset	10 1/2 (267)	120	350	14 (2.1)	0.9 (0.40)	**SGA1J10JW3**
	Offset	10 1/2 (267)	240	350	14 (2.1)	0.9 (0.40)	**SGA1J10JW4**
	Offset	10 1/2 (267)	120	400	16 (2.5)	0.9 (0.40)	**SGA1J10JW5**
	Offset	10 1/2 (267)	240	400	16 (2.5)	0.9 (0.40)	**SGA1J10JW6**
	Offset	12 (305)	120	250	8 (1.2)	1.0 (0.45)	**SGA1J12AW1**
	Offset	12 (305)	240	250	8 (1.2)	1.0 (0.45)	**SGA1J12AW2**
	Offset	12 (305)	120	350	12 (1.8)	1.0 (0.45)	**SGA1J12AW3**
	Offset	12 (305)	240	350	12 (1.8)	1.0 (0.45)	**SGA1J12AW4**
	Offset	12 (305)	120	500	17 (2.6)	1.0 (0.45)	**SGA1J12AW5**
	Offset	12 (305)	240	500	17 (2.6)	1.0 (0.45)	**SGA1J12AW6**
	Offset	14 (356)	120	300	8 (1.2)	1.2 (0.54)	**SGA1J14AW1**
	Offset	14 (356)	240	300	8 (1.2)	1.2 (0.54)	**SGA1J14AW2**
	Offset	14 (356)	120	500	13 (2.0)	1.2 (0.54)	**SGA1J14AW3**
	Offset	14 (356)	240	500	13 (2.0)	1.2 (0.54)	**SGA1J14AW4**
	Offset	15 1/4 (387)	120	325	8 (1.2)	1.4 (0.64)	**SGA1J15EW1**
	Offset	15 1/4 (387)	240	325	8 (1.2)	1.4 (0.64)	**SGA1J15EW2**
	Offset	15 1/4 (387)	240	500	12 (1.8)	1.4 (0.64)	**SGA1J15EW3**

CONTINUED

Note: 375 finned strip heaters with one-on-one terminations are available as a manufactured item only. Please contact your Watlow representative for additional information.

Note: Above heaters are modified stock and may not be returned for a restocking charge.

Note: 5/16 x 1/2 in. (7.9 x 13 mm) mounting holes are supplied on all 375 finned strip heaters as standard, larger mounting holes may be provided 17/32 in. x 11/16 in. (13.5 mm x 17.5 mm).

Note: Heaters can be customized given a business case review. Contact the factory for details.

Finned Heaters

375 Finned Strip Heaters

Heater Part Numbers *(Continued)*

Width in.	(mm)	Termination	Length in.	(mm)	Volts	Power (Watts)	W/in²	(W/cm²)	Approx. Net Wt. lbs	(kg)	Part Number
1 1/2	(38)	Offset	17 7/8	(454)	120	350	8	(1.2)	1.6	(0.73)	**SGA1J17RW1**
		Offset	17 7/8	(454)	240	350	8	(1.2)	1.6	(0.73)	**SGA1J17RW2**
		Offset	17 7/8	(454)	120	375	9	(1.4)	1.6	(0.73)	**SGA1J17RW3**
		Offset	17 7/8	(454)	240	375	9	(1.4)	1.6	(0.73)	**SGA1J17RW4**
		Offset	17 7/8	(454)	120	500	12	(1.8)	1.6	(0.73)	**SGA1J17RW5**
		Offset	17 7/8	(454)	240	500	12	(1.8)	1.6	(0.73)	**SGA1J17RW6**
		Offset	17 7/8	(454)	120	750	18	(2.8)	1.6	(0.73)	**SGA1J17RW7**
		Offset	17 7/8	(454)	240	750	18	(2.8)	1.6	(0.73)	**SGA1J17RW8**
		Offset	17 7/8	(454)	120	1000	24	(3.7)	1.6	(0.73)	**SGA1J17RW9**
		Offset	17 7/8	(454)	240	1000	24	(3.7)	1.6	(0.73)	**SGA1J17RW10**
		Offset	19 1/2	(495)	240	350	6	(.9)	1.7	(0.77)	**SGA1J19JW2**
		Offset	19 1/2	(495)	120	500	9	(1.4)	1.7	(0.77)	**SGA1J19JW3**
		Offset	19 1/2	(495)	240	500	9	(1.4)	1.7	(0.77)	**SGA1J19JW4**
		Offset	19 1/2	(495)	240	750	13	(2.0)	1.7	(0.77)	**SGA1J19JW5**
		Offset	19 1/2	(495)	240	1000	17	(2.6)	1.7	(0.77)	**SGA1J19JW6**
		Offset	21	(533)	120	500	8	(1.2)	1.9	(0.86)	**SGA1J21AW3**
		Offset	21	(533)	240	500	8	(1.2)	1.9	(0.86)	**SGA1J21AW4**
		Offset	21	(533)	120	750	12	(1.8)	1.9	(0.86)	**SGA1J21AW5**
		Offset	21	(533)	240	750	12	(1.8)	1.9	(0.86)	**SGA1J21AW6**
		Offset	23 3/4	(603)	240	500	7	(1.0)	2.1	(0.95)	**SGA1J23NW3**
		Offset	23 3/4	(603)	240	750	10	(1.5)	2.1	(0.95)	**SGA1J23NW5**
		Offset	23 3/4	(603)	120	1000	14	(2.1)	2.1	(0.95)	**SGA1J23NW6**
		Offset	23 3/4	(603)	240	1000	14	(2.1)	2.1	(0.95)	**SGA1J23NW7**
		Offset	23 3/4	(603)	240	1500	20	(3.1)	2.1	(0.95)	**SGA1J23NW8**
		Offset	25 1/2	(648)	120	500	6	(0.9)	2.3	(1.00)	**SGA1J25JW2**
		Offset	25 1/2	(648)	240	500	6	(0.9)	2.3	(1.00)	**SGA1J25JW3**
		Offset	25 1/2	(648)	120	750	9	(1.4)	2.3	(1.00)	**SGA1J25JW4**
		Offset	25 1/2	(648)	240	750	9	(1.4)	2.3	(1.00)	**SGA1J25JW5**
		Offset	25 1/2	(648)	240	1000	12	(1.8)	2.3	(1.00)	**SGA1J25JW6**
		Offset	26 3/4	(680)	240	700	8	(1.2)	2.4	(1.10)	**SGA1J26NW2**
		Offset	26 3/4	(680)	240	1000	12	(1.8)	2.4	(1.10)	**SGA1J26NW3**
		Offset	30 1/2	(775)	120	750	8	(1.2)	2.7	(1.20)	**SGA1J30JW1**
		Offset	30 1/2	(775)	240	750	8	(1.2)	2.7	(1.20)	**SGA1J30JW2**
		Offset	33 1/2	(851)	240	750	7	(1.0)	3.0	(1.40)	**SGA1J33JW1**
		Offset	35 7/8	(911)	120	1000	8	(1.2)	3.2	(1.50)	**SGA1J35RW1**
		Offset	35 7/8	(911)	240	1000	8	(1.2)	3.2	(1.50)	**SGA1J35RW2**
		Offset	35 7/8	(911)	240	1500	13	(2.0)	3.2	(1.50)	**SGA1J35RW3**
		Offset	38 1/2	(978)	120	1000	8	(1.2)	3.4	(1.50)	**SGA1J38JW2**
		Offset	38 1/2	(978)	240	1500	11	(1.7)	3.4	(1.50)	**SGA1J38JW3**
		Offset	42 1/2	(1080)	240	1500	10	(1.5)	3.8	(1.70)	**SGA1J42JW1**
		Offset	47 7/8	(1216)	240	2250	16	(2.4)	4.3	(2.00)	**SGA1J47RW2**

Note: 375 finned strip heaters with one-on-one terminations are available as a manufactured item only. Please contact your Watlow representative for additional information.

Note: Above heaters are modified stock and may not be returned for a restocking charge.

Note: 5/16 x 1/2 in. (7.9 x 13 mm) mounting holes are supplied on all 375 finned strip heaters as standard, larger mounting holes may be provided 17/32 in. x 11/16 in. (13.5 mm x 17.5 mm).

Finned Heaters

FINBAR™ Single-Ended Heaters

Composed of aluminized steel fins press fitted to a one-inch single-ended FIREBAR element. The FINBAR™ is designed to improve heat transfer to the air and permits putting more power in tighter spaces—like forced air ducts, dryers, ovens and load bank resistors.

Heat transfer, lower sheath temperature and element life are all maximized by its finned construction. Installation is simplified by terminations exiting at one end and mounting accommodations on both ends.

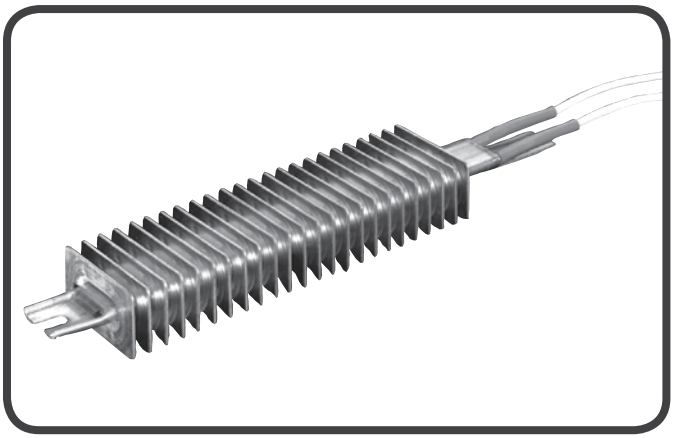

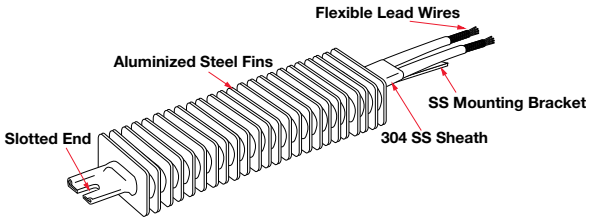

Performance Capabilities

- Watt densities up to 50 W/in^2 (7.7 W/cm^2)
- 304 stainless steel sheath temperatures up to 1200°F (650°C)
- Voltages up to 480VAC
- Amperages up to 48 amperes per heater or 16 amperes per coil

Features and Benefits

Rugged aluminized steel fins

- Provides an increase in surface area to approximately 16 square inches for every linear inch of element length. Fins press fitted to the heating element improve heat transfer to the air

Single-ended termination

- Simplifies wiring and installation

Stainless steel mounting bracket, welded to the terminal end, supplied with a slotted end

- Allows ease of installation

Lavacone seals

- Provides protection against humid storage conditions, moisture retardant to 221°F (105°C)

Typical Applications

- Forced air heating for dryers, ovens, ducts
- Still air heating for ovens, comfort heating
- Incubators
- Ink drying
- Load bank resistors

For detailed product and technical data, see the full FINBAR product section located on pages 103 through 105.

FIREROD® CARTRIDGE Heaters

The Watlow® FIREROD® cartridge heater incorporates engineering excellence and is supported by over 60 years of solid industry performance across a broad range of simple and complex applications. As the premier choice in swaged cartridge heating, thousands of industrial manufacturers continue to choose Watlow as their trusted thermal partner and certified cartridge heater supplier.

Built using premium materials and tight manufacturing controls, the FIREROD heater provides superior heat transfer, uniform temperatures, resistance to oxidation and corrosion and a long life even at high temperatures. Every system component that leaves our manufacturing facilities meets our strict quality assurance specifications, in addition to those set forth by leading standards and regulating industries.

To meet our customer's individual needs, there are many delivery options available for FIREROD heaters.

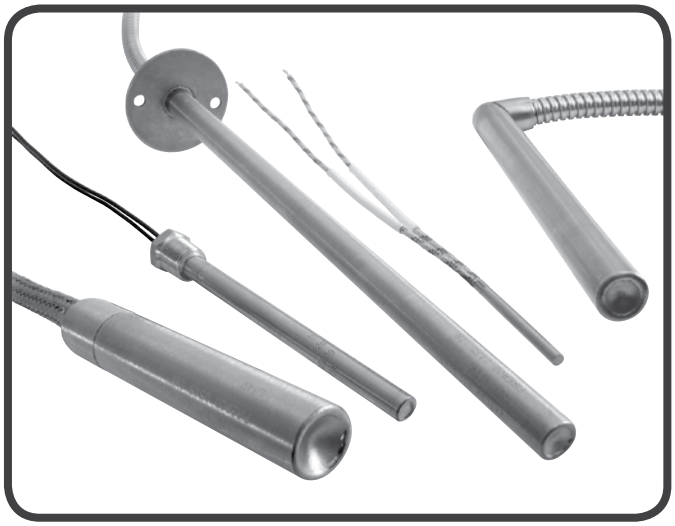

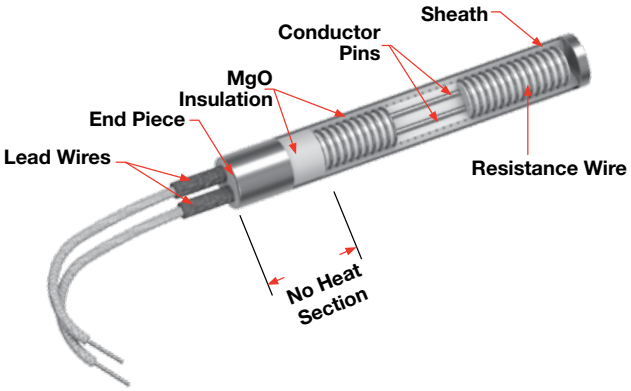

Performance Capabilities

- Part temperatures up to 1400°F (760°C) on alloy 800 sheath
- Watt densities up to 400 W/in^2 (62 W/cm^2)
- Maximum voltage up to 480V

Features and Benefits

Nickel-chromium resistance wire
- Ensures even and efficient distribution of heat to the sheath

Metalurgically-bonded conductor pins
- Ensures a trouble-free electrical connection

Magnesium oxide insulation of specific grain and purity
- Results in high dielectric strength and contributes to faster heat-up

Alloy 800 sheath
- Resists oxidation and corrosion from heat, many chemicals and atmospheres

Minimal spacing between the element wire and sheath
- Results in lower internal temperature
- Accommodates a design with fewer or smaller heaters operating at higher watt densities

International Organization for Standardization (ISO) 9001 certified
- Provides confidence that quality and reliability expectations are met

UL® and CSA approved flexible stranded wires
- Lead insulation rated to temperatures up to 840°F (450°C)

Patented lead adapter (LA) method
- Allows same day shipment on more than 150,000 configurations of stock FIREROD heaters and lead combinations

For detailed product and technical data, see the full FIREROD product section located on pages 9 through 44.

Enclosure Heaters

WATROD™ Heaters

Designed to prevent freezing and condensation in electrical and mechanical enclosures, the WATROD™ element is enclosed in a perforated, aluminized-steel bracket.

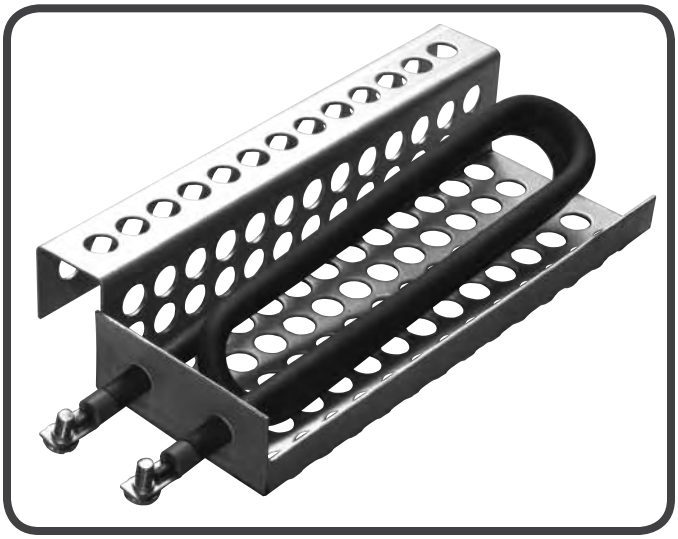

Performance Capabilities

- Watt densities up to 15 W/in^2 (2.3 W/cm^2)
- Wattages up to 1000 watts
- UL® and CSA component recognition up to 250VAC

Features and Benefits

Stainless steel sheath wall
- Resists corrosion and protects the heating coil from exposure

Silicone resin seal
- Provides protection against humid storage conditions and is effective to 390°F (200°C)

Perforated aluminized-steel mounting bracket
- Eases installation and helps prevent direct contact with the heating element

Stock straight projection Type B #10-32 screw lug terminals
- Provides easy electrical connection

Made-to-order threaded stud
- Provides quick connect and flexible lead wire termination options

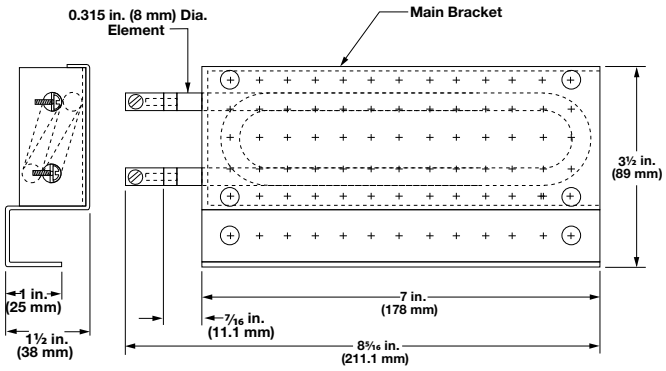

Typical Applications

- Control panels
- Traffic signal boxes
- Automated teller machines
- Switch gear
- Electronic equipment

Application Hints

- Locate heater(s) in the lowest portion of the enclosure to maximize convection heating
- Place thermostat(s) in the upper half of the enclosure, away from the heater(s)

Enclosure Heaters

WATROD Heaters

Technical Heaters

Watts	Watt Density W/in²	Watt Density (W/cm²)	Part Number 125VAC	Part Number 250VAC	Est. Net Wt. lbs	Est. Net Wt. (kg)
95	4	(0.6)	**EN951**		1.5	(0.7)
100	4	(0.6)		**EN10010**	1.5	(0.7)
250	10	(1.6)	**EN2501**	**EN25010**	1.5	(0.7)
375	15	(2.3)	**EN3751**	**EN37510**	1.5	(0.7)

Enclosure Heaters

Silicone Rubber Heaters

Designed for freeze and condensation protection, Watlow's enclosure heaters are rugged, reliable and safe to operate. These rectangular-shaped, wire-wound silicone rubber heaters can be ordered individually with adhesive or vulcanized to an aluminum mounting plate. A thermostat can be attached to the heater or mounted separately as shown.

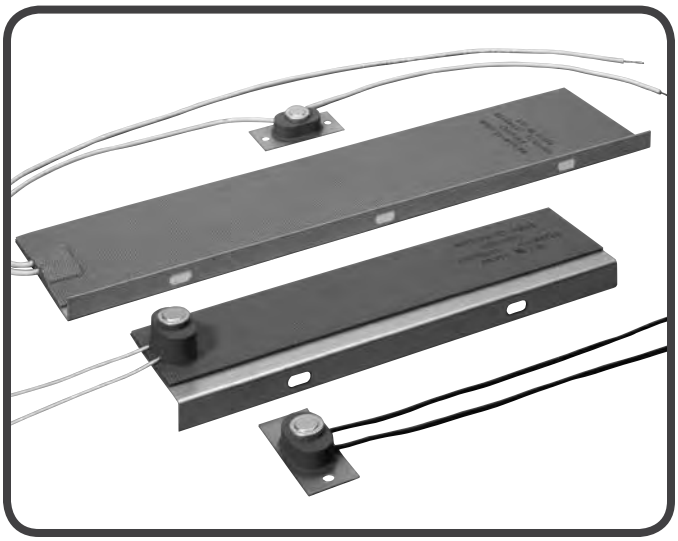

Performance Capabilities

- Watt density rating of 5 W/in^2 (0.8 W/cm^2)
- Temperature up to 150°F (66°C)

Features and Benefits

Pressure-sensitive adhesive mounting to an aluminum plate or customer cementing

- Reduces installation time
- Creates easy installation

Several standard thermostat set points

- Ensures protection against freezing with minimal energy consumption

Variety of installation options

- Provide the option to utilize cement installation to ensure permanent heater attachment
- The pressure sensitive adhesive installation option saves assembly time
- Facilitate assembly and disassembly with factory installed aluminum plate mount

Remote thermostat option

- Provides optimal choice of heater location versus temperature control location

Lead options

- Allows for a variety of applications
- Allows different lead lengths for a variety of wiring requirements

Factory pre-wired heater and thermostat

- Ensures safety and reliability as there are no exposed electrical connections

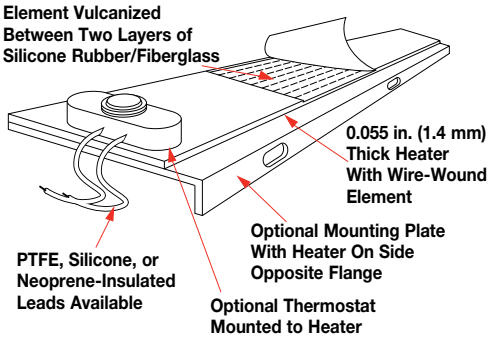

Typical Applications

Freeze or condensation prevention in housings containing electronic equipment including:

- Traffic signal boxes
- Automated teller machines
- Temperature control panels
- Gas or liquid control valve housings

Enclosure Heaters

Silicone Rubber Heaters

Options

Aluminum Mounting Plate

Both vertical and horizontal mounting can be accomplished with enclosure heaters. Mounting plates are 0.040 in. (1.02 mm) thick, specified as #3003 H14 aluminum. The preferred orientation is vertical with a thermostat attached at the lower end (as shown in the drawing).

For horizontal mounting, a remote thermostat is recommended. An enclosure heater can be ordered by itself, with PSAS or vulcanized to an aluminum mounting plate. See the *Thermostat* section below for more information.

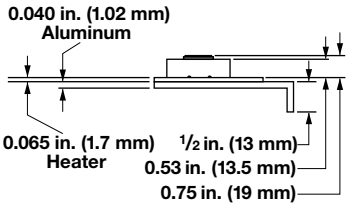

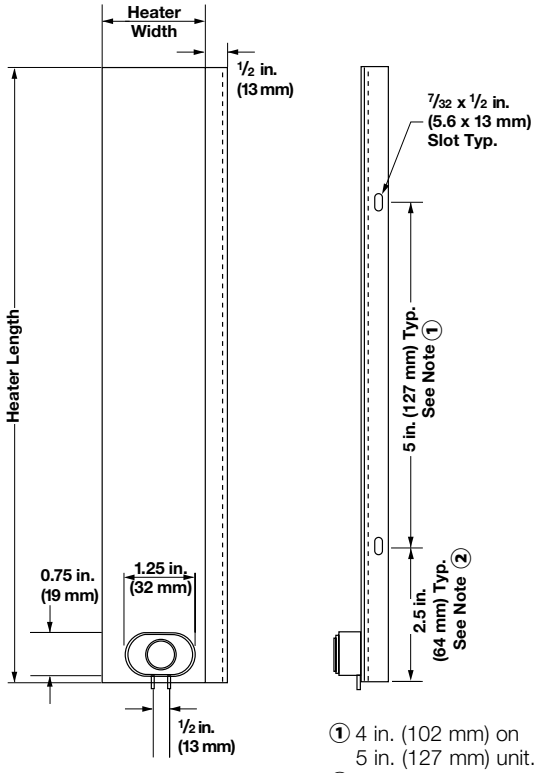

1 4 in. (102 mm) on 5 in. (127 mm) unit.
2 0.5 in. (13 mm) on 5 in. (127 mm) unit.

Thermostats

Mounted on Heater

Built-in snap action thermostats from Watlow sense air temperature. See the ordering chart on the following page for available settings.

Remote From Heater

For an air sensing thermostat that is separate from the heater, the ST-207E is ideal. It is a modified ST-207 mounted on a 1/32 in. (0.8 mm) thick G-10 circuit board with the thermostat's metal cap exposed to sense air temperature. The thermostat is placed at the midpoint of the lead length. The sensor can be preset at the temperatures listed for integral sensors.

Notes:

- On both integral and remote sensors, the thermostat's exposed metal cap is vulnerable to impact. This could defeat the thermostat's switching action and cause heater malfunction.
- T-10 thermostats are not recommended for enclosure heating applications.

Enclosure Heaters

Silicone Rubber Heaters

Technical Data

Determining Minimum Wattage Requirements For Enclosures

This chart is an excellent guide for determining total wattage requirements for both insulated and uninsulated enclosures, assuming the box is relatively airtight.

For windy conditions, add an additional 50 percent to the wattage requirement listed.

Temperature Rise from Ambient °F (°C)	Total Enclosure Surface Area — Square Feet (Square Meters)													
	2 (0.2)	3 (0.3)	4 (0.4)	5 (0.5)	6 (0.6)	7.5 (0.7)	9 (0.8)	10 (0.9)	15 (1.4)	20 (1.9)	25 (2.3)	30 (2.8)	40 (3.7)	50 (4.7)
20 (11)	30	40	55	70	80	100	120	135	205	270	335	405	540	670
	10	10	15	20	20	25	30	35	50	65	80	100	130	160
40 (22)	55	80	110	135	160	200	245	270	405	540	670	805	1075	1340
	15	20	30	35	40	50	60	65	100	130	160	195	260	320
60 (33)	90	120	160	205	245	300	365	405	605	805	1005	1210	1610	2010
	20	30	55	50	60	75	90	100	145	195	240	290	385	480
80 (44)	110	160	215	270	325	400	485	540	805	1075	1340	1610	2145	2680
	30	40	55	65	80	100	115	130	195	260	320	385	515	640
100 (56)	135	200	270	335	405	500	605	670	1005	1340	1675	2010	2680	3350
	35	50	65	80	100	125	145	160	240	320	400	480	640	800
120 (67)	165	240	320	405	485	600	725	805	1210	1610	2010	2415	3220	4020
	40	60	80	100	115	150	175	195	290	385	480	580	770	960
140 (78)	190	280	375	470	565	700	845	940	1410	1880	2345	2815	3755	4690
	45	70	90	115	135	175	205	225	340	450	560	675	900	1120

Uninsulated boxes Insulated boxes

Silicone Rubber Enclosure Heaters Offering

For a complete list of silicone rubber product offerings available for use as an enclosure heater with a thermostat, please refer to the offerings on page 119.

FLUENT® In-line Heaters

Watlow's FLUENT® in-line fluid heater is a small, lightweight, high-performance heater that can replace both a traditional immersion type heater or a heater wrapped around a tube as part of a thermal system. Watlow's FLUENT heater is designed as an integrated solution that replaces multiple components in a system. This heater design reduces overall system cost and complexity. Because of its high watt density, it offers ultra-fast response leading to higher system performance. Featuring Watlow's patented layered heater technology, the heater makes use of its entire surface to produce heat, which optimizes heat transfer and temperature uniformity.

Features and Benefits

Small, lightweight, robust heater construction
- Replaces multiple components in a system
- Reduces overall system size
- Lowers total cost of ownership

Patented circuit patterning process
- Facilitates customizable heating profiles
- Enables distributed wattage and/or multiple zones
- Assures precise and repeatable power distribution

High watt density, low mass heater
- Contributes to fast response time
- Allows for efficient heat transfer
- Enables on-demand process start-up

Typical Applications

- Hemodialysis fluid heating
- Food cooking equipment
- Semiconductor purge and carrier gas heating
- Ink preheating systems
- On-demand fluid heating

For detailed product and technical data, see the full FLUENT in-line product section located on pages 445 through 448.